metos

FLAT-TOP RANGE

ARDOX S

TYPE: 2, 4, 6

Installation and Operation Manual

S/N: 035524/17 Rev.: 2.1

Dear Customer,

Congratulations on deciding to choose our appliance for your kitchen activities. You made an excellent choice. We will do our best to make you a satisfied customer like thousands of customers we have around the world.

Please read this manual carefully. You will learn correct, safe and efficient working methods in order to get the best possible benefit from the appliance. The instructions and hints in this manual will give you a quick and easy start, and you will soon note how nice it is to use this equipment.

All rights are reserved for technical changes.

You will find the main technical data on the rating plate fixed to the appliance. When you need service or technical help, please let us know the serial number shown on the rating plate. This will make it easier to provide you with correct service.

For your convenience, space is provided below for you to record your local service contact information.

Service phone number:.....

Contact person:.....

1. General 1
1.1 Symbols used in the manual 1
1.2 Symbols used on the appliance 1
1.3 Checking the relationship of the appliance and the manual 1

2. Safety 2
2.1 Safe use of the appliance 2
2.2 Disposal of the appliance 2

3. Functional description 3
3.1 Application of the appliance 3
3.1.1 Prohibited use 3
3.2 Operating principle and construction 3

4. Operation instructions 5
4.1 Before use 5
4.2 Operation 5
4.2.1 Selecting cookware 5
4.2.2 Using the range 5
4.3 After use 6
4.3.1 Cleaning 6
4.3.2 Service 6

5. Installation 7
5.1 General 7
5.2 Transporting and unpacking the range 7
5.3 Positioning the range 7
5.4 Electricity connections 7
5.5 Test-run 8

6. Troubleshooting 9

7. Spare parts 11
7.1 Voltage codes 13
7.2 Product codes 13

8. Technical specifications 23

1. General

Carefully read the instructions in this manual as they contain important information regarding proper, efficient and safe installation, use and maintenance of the appliance.

Keep this manual in a safe place for eventual use by other operators of the appliance.

The installation of this appliance must be carried out in accordance with the manufacturer's instructions and following local regulations. The connection of the appliance to the electric and water supply must be carried out by qualified persons only.

Persons using this appliance should be specifically trained in its operation.

Switch off the appliance in case of failure or malfunction. The periodical function checks requested in the manual must be carried out according to the instructions. Have the appliance serviced by a technically qualified person authorized by the manufacturer and using original spare parts.

Not complying with the above may put the safety of the appliance in danger.

1.1 Symbols used in the manual

This symbol informs about a situation where a safety risk might be at hand. Given instructions are mandatory in order to prevent injury.

This symbol informs about the right way to perform in order to prevent bad results, appliance damage or hazardous situations.

This symbol informs about recommendations and hints that help to get the best performance out of the appliance.

1.2 Symbols used on the appliance

This symbol on a part informs about electrical terminals behind the part. The removal of the part must be carried out by qualified persons only.

1.3 Checking the relationship of the appliance and the manual

The rating plate of the appliance indicates the serial number of the appliance. If the manuals are missing, it is possible to order new ones from the manufacturer or the local representative. When ordering new manuals it is essential to quote the serial number shown on the rating plate.

2. Safety

2.1 Safe use of the appliance

Because the range is a heated appliance that has hot surfaces during normal use, the following warnings and instructions must be followed in order to avoid burns:

During long-time operation even the frame surrounding the flat top gets hot.

The capability of the flat top to store and even out the heat also keeps it hot for a long time after switching it off.

For safe handling of cookware on the cooking top, always use heat protective gloves.

Do not leave the range on for long periods totally without supervision.

2.2 Disposal of the appliance

Once the range has reached the end of its useful life, it must be disposed of in compliance with local rules and regulations. The best way of dealing with or recycling any substances which potentially have an adverse impact on the environment is to dispose of them through a proper problem waste company.

3. Functional description

3.1 Application of the appliance

The Ardox range is intended for preparing different kinds of foodstuffs using cookware.

3.1.1 Prohibited use

Use of the appliance for any other purposes than that stated above is prohibited.

Preparing food directly on the flat top without cookware is prohibited.

The manufacturer shall not be held liable for any situations which may arise from failure to comply with the warnings and instructions given in this manual.

3.2 Operating principle and construction

In addition to a single range, there are combinations of a range and an oven (Chef 22 or Chef 24) or a range and a proving cabinet (Chef 20). This manual covers the Ardox range, while Chef 22, Chef 24 and Chef 20 have their own manuals.

The range is equipped with two cooking zones.

The range is equipped with four cooking zones.

The range is equipped with six cooking zones.

Each cooking zone is equipped with a stepless power regulator. A green pilot light for every cooking zone indicates that the power is on.

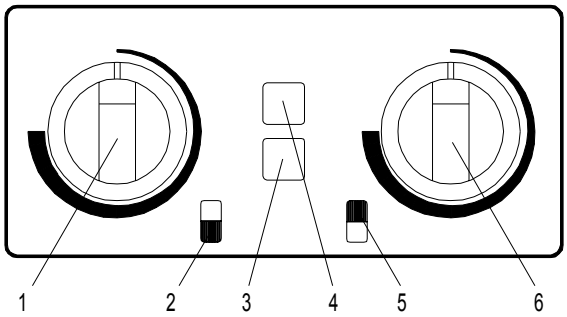

Operating panel

Front cooking zone

1. Power regulator
2. Symbol of cooking zone
3. Pilot light, power on

Rear cooking zone

4. Pilot light, power on
5. Symbol of cooking zone
6. Power regulator

4. Operation instructions

4.1 Before use

There is a slight smell of metal and thermal insulation when the range is heated for the first time. This is completely normal and disappears by heating the range. Before using the range for the first time, heat it at maximum temperature until the smell disappears.

4.2 Operation

4.2.1 Selecting cookware

You can use the same cookware on the flat-top range as on the conventional range.

To get the best benefit from the range as well as from the cookware observe the following:

- Always lift pans, do not drag.
- Use good quality flat-based cookware.
- Wait for pans to cool before putting them in cold water.
- Always ensure that pans have clean, dry bases before use.
- Ensure that pan handles are positioned safely and away from heat sources.
- Always use pan lids except when frying.

Remember that good quality pans retain heat well, so generally only low or medium heat is necessary.

4.2.2 Using the range

Ranges intended for use aboard ships are equipped with a kettle support. Using a range without the kettle support is prohibited.

During installation a mains switch may have been fitted near the range, often on a wall nearby. Check that the mains switch is in the ON position.

The range is controlled with power regulators and pilot lights (see Figure “Operating panel”). Start cooking on maximum power (turn the knob 3/4 rounds clockwise). When boiling starts decrease the power as needed.

Do not leave the cooking zone on without any load because it then overheats, which considerably decreases its operating life. By turning the cooking zone off when not needed energy is also saved and a cooler working environment is achieved.

If there are longer interruptions in the electricity distribution, all power regulators of the range should be set to the 0 position. This should be done in order to prevent unexpected start-up of the range when the electricity distribution is restored.

4.3 After use

4.3.1 Cleaning

Use of a hose or pressure washer to clean the range is forbidden.

Before cleaning the range, please remember that it remains hot for a long time after use.

In all cleaning prefer chemical cleaning methods rather than mechanical rubbing.

Ranges are electrical appliances, which means that there are restrictions regarding cleaning them with water. Clean the outside of the range with a damp cloth only to avoid water getting into the air inlets.

When cleaning the surfaces of the range, use a slightly alkaline detergent (pH 8-10) diluted in water according to instructions (for instance a detergent intended for oven cleaning).

Cleaning is very easy if possible spillovers are removed immediately with a damp cloth.

Sugar and mixes containing much sugar must be removed immediately, because later removing will be laborious.

A clean cooking top ensures efficient heat transfer to the cookware. Cooking is then fast and the operating life of the heating elements is extended.

4.3.2 Service

This appliance does not contain parts which can be serviced by the user. Maintenance must be carried out by an authorised agent.

In the event of fault or malfunction, switch the appliance off at the mains. Contact an agent authorised by the manufacturer and use original spare parts.

5. Installation

5.1 General

The installation of the appliance must be carried out in accordance with the manufacturer's instructions and in compliance with local rules and regulations. These instructions must be used together with the installation drawing.

This appliance may be connected to the mains electricity by qualified persons only.

5.2 Transporting and unpacking the range

The range is best transported in its own package, which protects it from outside damage. If it is necessary to unpack the range, possible lifting must be done from the bottom frame using suitable spacers of wood. To prevent damage, the top of the range must not be used as a worktop on the construction site or during installation.

5.3 Positioning the range

Because the temperature of the cooking zone accidentally forgotten on without a pan may reach even 350°C, it is mandatory to follow local fire safety regulations when installing the range.

When installing the range, care should be given to ensure that there is a free passage of cooling air around the range and that there are no other sources of heat near the cooling vents.

It is recommended that the range is placed under a hood because of the steam arising during cooking.

The range is positioned in the installation place and adjusted in a horizontal position from the adjustable legs.

When the range is in the right place and in a horizontal position, fix it firmly to the floor. Models for use on land are fixed by the plates on the back legs and ranges intended for use on ships by the plates on each leg.

5.4 Electricity connections

Should maintenance require the appliance to be tested before all the protective coverings are in place, please be particularly careful of the moving parts inside the casing as well as of live parts.

To facilitate future maintenance and to increase safety, install a separate disconnection switch for the range in the immediate vicinity of the appliance. The switch should disconnect the appliance completely from the mains supply.

The supply cable inlet is in the back right-hand corner of the range and the connection point inside the range.

Observe the range movement (200 mm) when installing the supply cable on ranges equipped with height adjustment.

The top deck needs to be open to connect the range to the mains. Unfix the screws at the front part of the flat top (parts 170 and 180) and raise the deck up.

Be cautious when opening the deck because of its weight and always lock the deck into the open position with the fixing rod.

All information needed to connect the range is to be found on the name plate, the connection diagram and the installation drawing.

5.5 Test-run

Please read the safety and operation instructions as well as the functional description of the appliance before testing the range.

Test the range once it has been connected to the mains electricity.

Check that every cooking zone heats up and the corresponding pilot light turns on when the zone is switched on with the power regulator.

Close and fasten the top deck.

6. Troubleshooting

If the appliance fails to work, check to ensure that

- it has been used according to the instructions
- all removable parts are in place
- the main power switch (usually on a wall or in the immediate vicinity of the appliance) is in the ON position
- the fuses (overload protection) have not blown in the fuse box. Ask a qualified person to check overload protection.

Should the range still not work, contact an authorised agent. Before contact, make sure you have at hand the appliance type and serial number to be found on the name plate on the right front corner of the appliance.

STOP

This appliance does not contain parts which can be serviced by the user. Maintenance must be carried out by an authorised agent.

7. Spare parts

General parts 15

General parts 17

General parts 19

Height-adjustable stand 21

7.1 Voltage codes

Voltage	Voltage code
A	3/N/PE~400/230V 50Hz
B	~250V 16A 50Hz
C	3/N/PE~380/220V 50Hz
D	3/PE~200V 50-60Hz
F	2/PE 220–240V 50Hz
G	3/N/PE~415/240V 50Hz
H	3/PE~230V 50Hz
I	3/PE~220V 60Hz
J	3/PE~380 50Hz
K	3/PE~400V 50Hz
L	3/PE~415V 50Hz
M	3/PE~440V 60Hz
N	3/PE~460V 60Hz
O	3/PE~480V 60Hz
P	1/N/PE~220-240V 50Hz
R	2/PE~220-230V 60Hz
S	3/N/PE~400/230V 50Hz
T	3/PE~230V 60Hz
U	1/N/PE~100V 50-60Hz

7.2 Product codes

Product code	Full name
Model codes	
S	ARDOX S
Type codes	
2	2 cooking zones
4	4 cooking zones
6	6 cooking zones
Accessory codes	
TA	TABLE MODEL
ST	STAND
HE	HEIGHT ADJUSTMENT

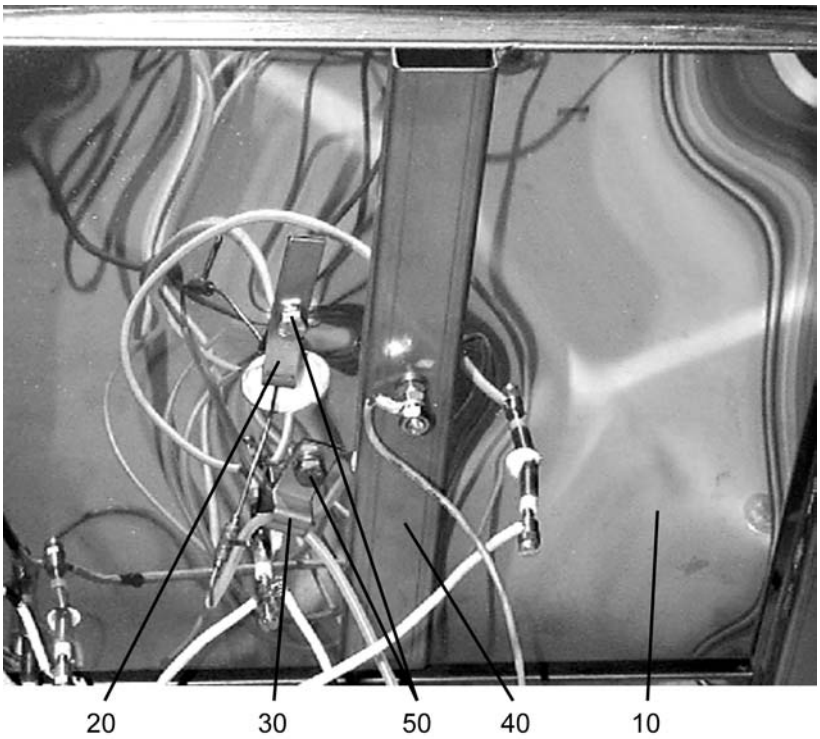
20
30
50
40
10

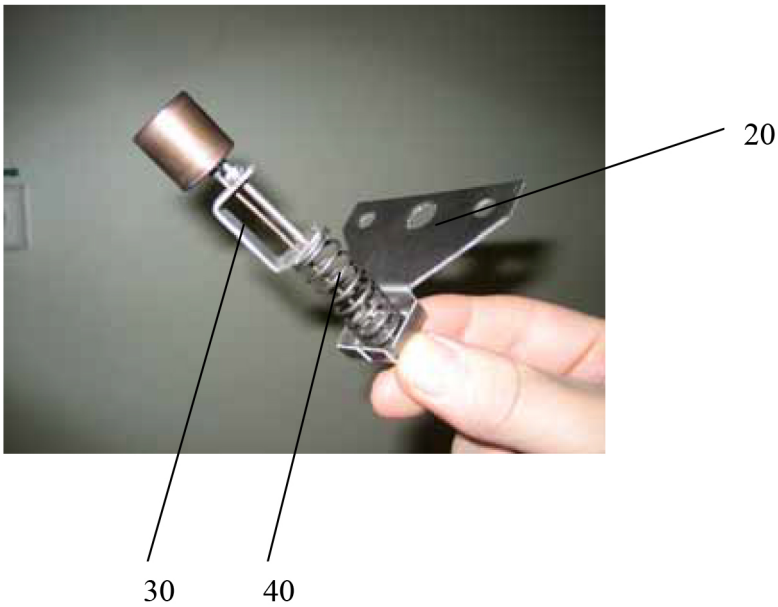
20
30
40

ID	Code	Model	Type	Acces-sory	Volt-age	Description
Module:General parts						
10	3599128	S				Case
20	3752039	S				Thermostat clamp
30	3752040	S				Clamp
40	3750753	S				Support
50	3029784	S				Screw
20	3596215	S				Thermostat clamp
30	3593729	S				Clamp

S=ARDOX S

2=2, 4=4, 6=6

TA=TABLE MODEL, ST=STAND, HE=HEIGHT ADJUSTMENT

A=3/N/PE~400/230V 50Hz, G=3/N/PE~415/240V 50Hz, H=3/PE~230V 50Hz, I=3/PE~220V 60Hz, J=3/PE~380 50Hz, K=3/PE~400V 50Hz, L=3/PE~415V 50Hz, M=3/PE~440V 60Hz

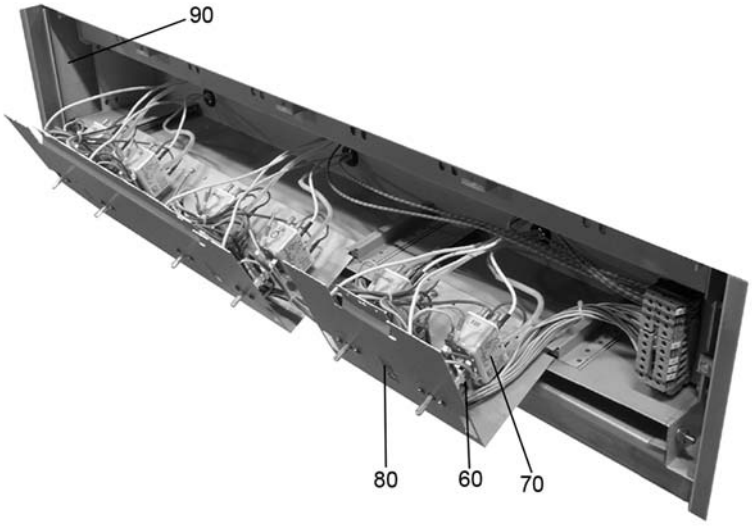
90
80
60
70

ID	Code	Model	Type	Accessory	Voltage	Description
Module:General parts						
60	3599625	S	2	TA,ST,HE	A,G,H,I	Switch
60	3599625	S	2	TA,ST,HE	J,K,L,M	Switch (Marine)
60	3599625	S	4	TA,ST,HE	A,G,H,I	Switch
60	3599625	S	4	TA,ST,HE	J,K,L,M	Switch (Marine)
60	3599625	S	6	TA,ST,HE	A,G,H,I	Switch
60	3599625	S	6	TA,ST,HE	J,K,L,M	Switch (Marine)
70	3599978	S		TA,ST,HE		Thermostat
80	3442159	S		TA,ST,HE		Pilot lamp, green
90	3512984	S		TA,ST,HE	J,K,L,M	Transformer for pilotlamps (Marine)

S=ARDOX S

2=2, 4=4, 6=6

TA=TABLE MODEL, ST=STAND, HE=HEIGHT ADJUSTMENT

A=3/N/PE~400/230V 50Hz, G=3/N/PE~415/240V 50Hz, H=3/PE~230V 50Hz, I=3/PE~220V 60Hz, J=3/PE~380 50Hz, K=3/PE~400V 50Hz, L=3/PE~415V 50Hz, M=3/PE~440V 60Hz

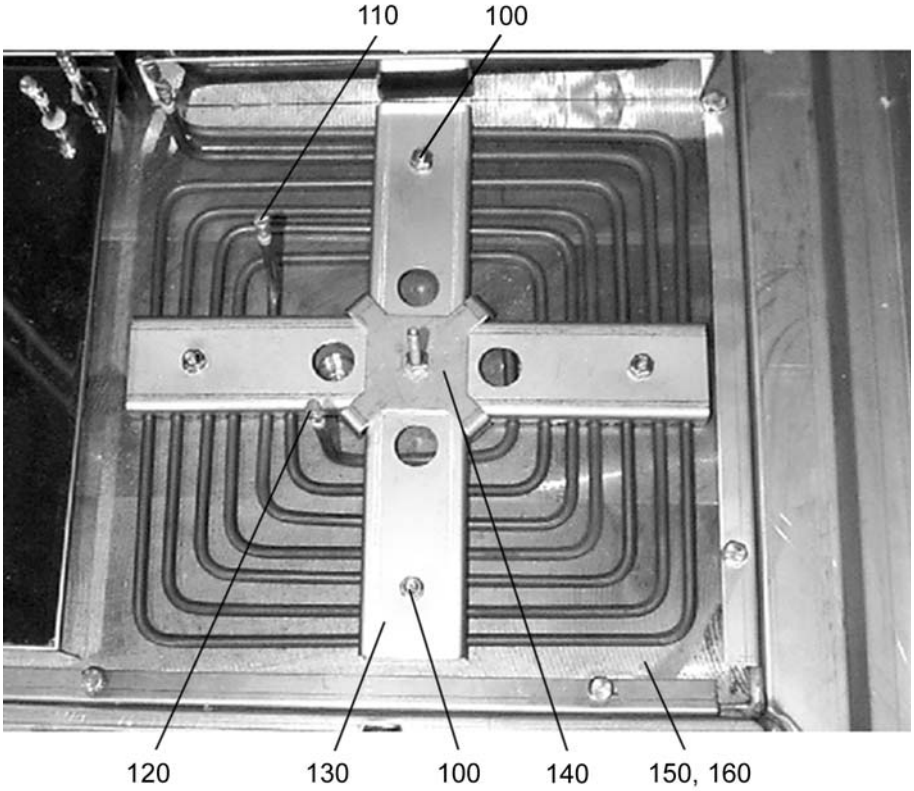
110
100
120
130
100
140
150, 160

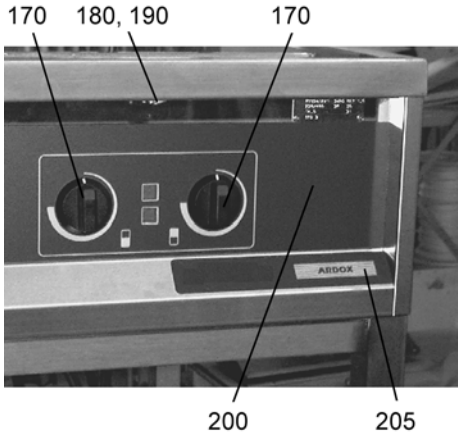
170
180, 190
170
ARDOX
200
205

Spare parts

ID	Code	Model	Type	Accessory	Voltage	Description
Module:General parts						
100	3026021	S				Nut
110	3599061	S				Heating element
120	3599054	S				Heating element
130	3599495	S				Clamp
140	3599505	S				X-clamp
150	3596582	S	4,6			Cooking surface
160	3596712	S	2,6			Cooking surface
170	3493234	S				Knob
180	3596624	S				Bracket
190	3255945	S				Screw
200	3598124	S	2,6			Control panel
200	3598131	S	4,6			Control panel
205	3599819	S				Control panel/Metos

S=ARDOX S

2=2, 4=4, 6=6

TA=TABLE MODEL, ST=STAND, HE=HEIGHT ADJUSTMENT

A=3/N/PE~400/230V 50Hz, G=3/N/PE~415/240V 50Hz, H=3/PE~230V 50Hz, I=3/PE~220V 60Hz, J=3/PE~380 50Hz, K=3/PE~400V 50Hz, L=3/PE~415V 50Hz, M=3/PE~440V 60Hz

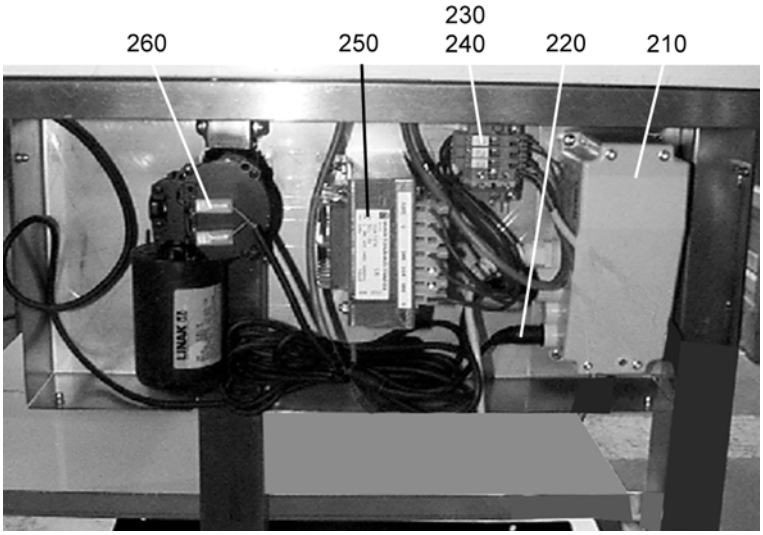
260
250
230
240
220
210

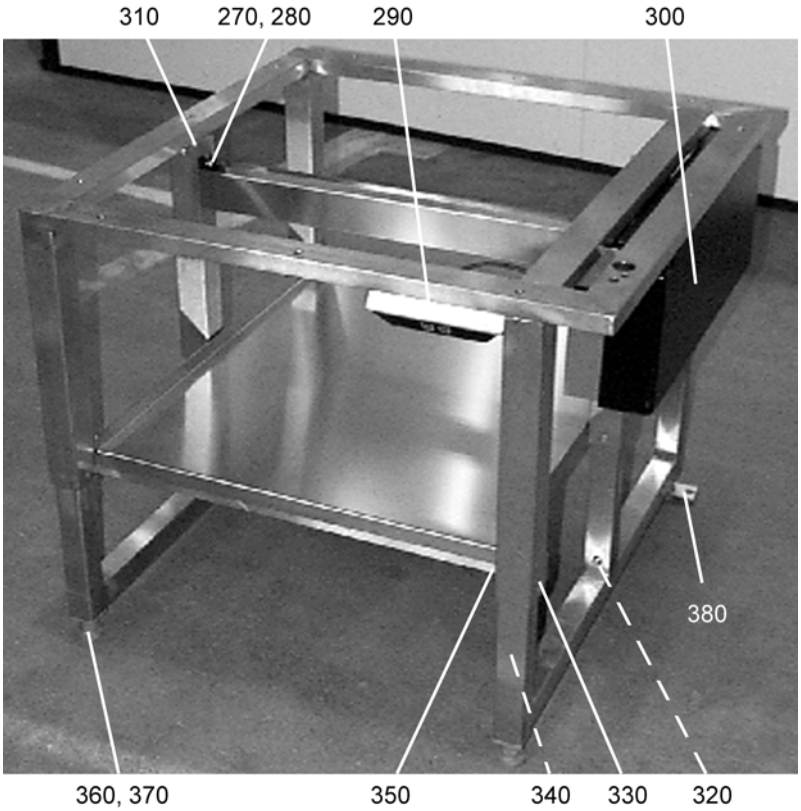
310
270, 280
290
300
380
360, 370
350
340
330
320

ID	Code	Model	Type	Acces-sory	Voltage	Description
Module:Height-adjustable stand						
210	3680652	S		HE		Transformer/Control box
220	3680653	S		HE		Cable
230	3512575	S		HE	J,K,L,M	Fuse terminal F1-F3
240	3434278	S		HE	J,K,L,M	Fuse, ceramic F1-F3
250	3347378	S		HE	J,K,L,M	Transformer (Marine)
260	3680650	S		HE		Gear unit+motor
270	3680651	S		HE		Gear unit
280	3680660	S		HE		Coupling for axle
290	3680654	S		HE		Control panel
300	3680655	S		HE		Guard box
310	3680663	S		HE		Axle sleeve, upper part
320	3680662	S		HE		Axle sleeve , lower part
330	3680656	S		HE		Sliding axle
340	3680731	S		HE		Plug 40x40
350	3680729	S		HE		Plug 20x40
360	3425957	S		HE		Adjustable foot, nut
370	3471625	S		HE		Adjustable foot, screw
380	3599833	S		HE		Foot flange

S=ARDOX S

2=2, 4=4, 6=6

TA=TABLE MODEL, ST=STAND, HE=HEIGHT ADJUSTMENT

A=3/N/PE~400/230V 50Hz, G=3/N/PE~415/240V 50Hz, H=3/PE~230V 50Hz, I=3/PE~220V 60Hz, J=3/PE~380 50Hz, K=3/PE~400V 50Hz, L=3/PE~415V 50Hz, M=3/PE~440V 60Hz

8. Technical specifications

Main and control circuit S00097A3

Main and control circuit S00099A3

Main and control circuit S00098A3

Main and control circuit S00092A4

Installation drawing L00041B3

Installation drawing L00030B3

Installation drawing L00082A3

Installation drawing L00031B3

Installation drawing L00039B3

Installation drawing L00083A3

Installation drawing L00084A3

Installation drawing L00032B3

Installation drawing L00040B3

Installation drawing L00085A3

Installation drawing L00086A3

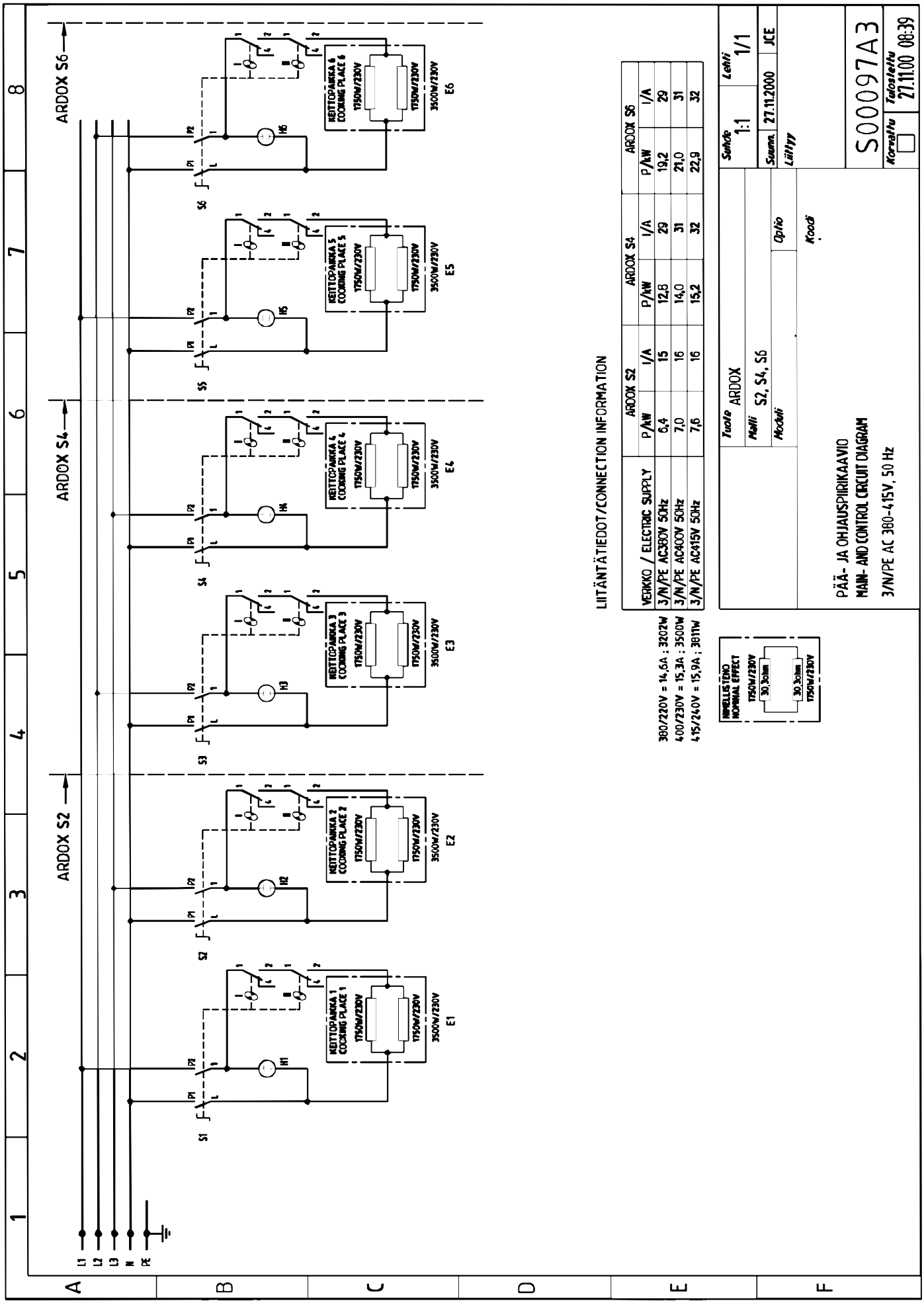

Main and control circuit S00097A3

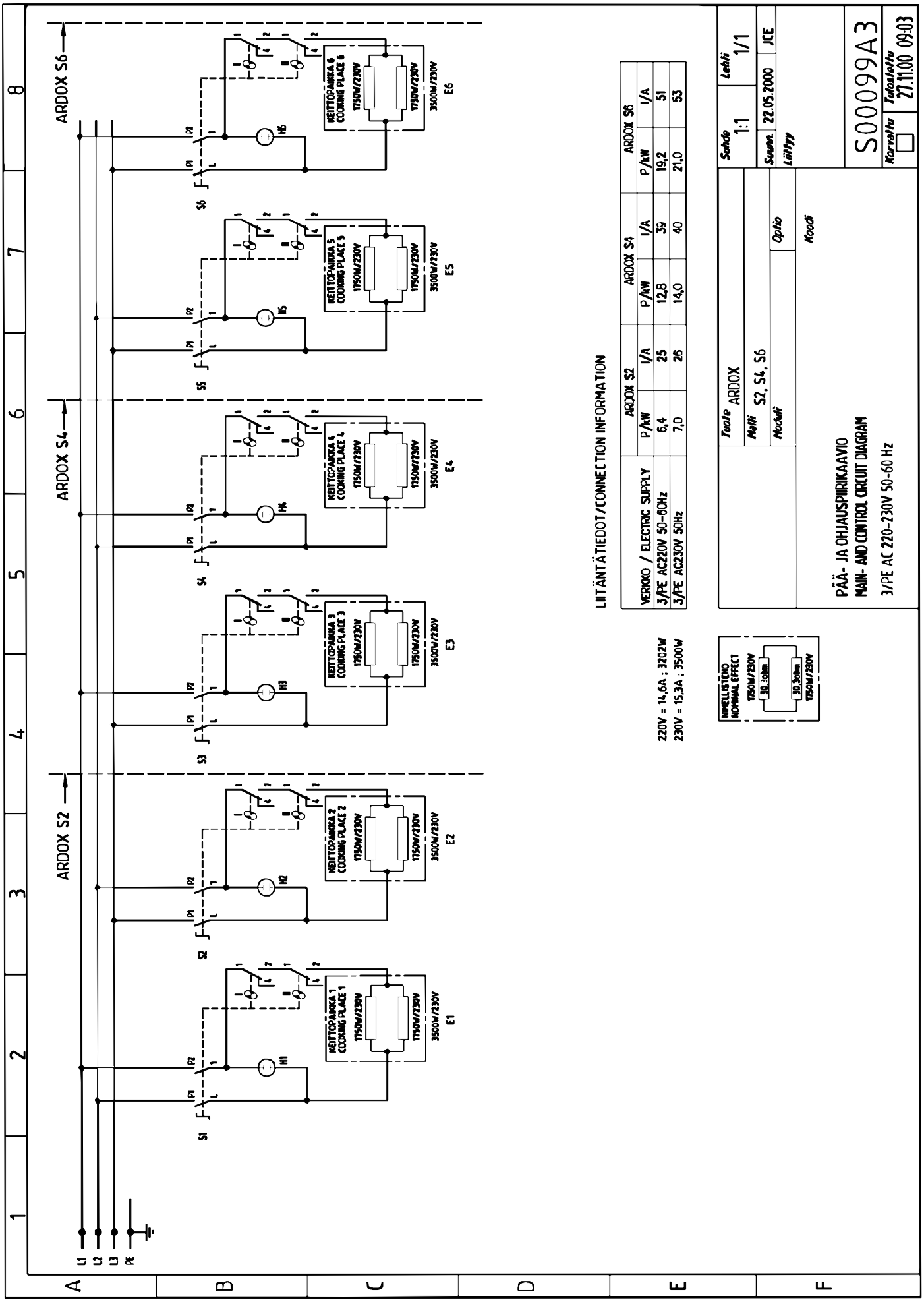

Main and control circuit S00099A3

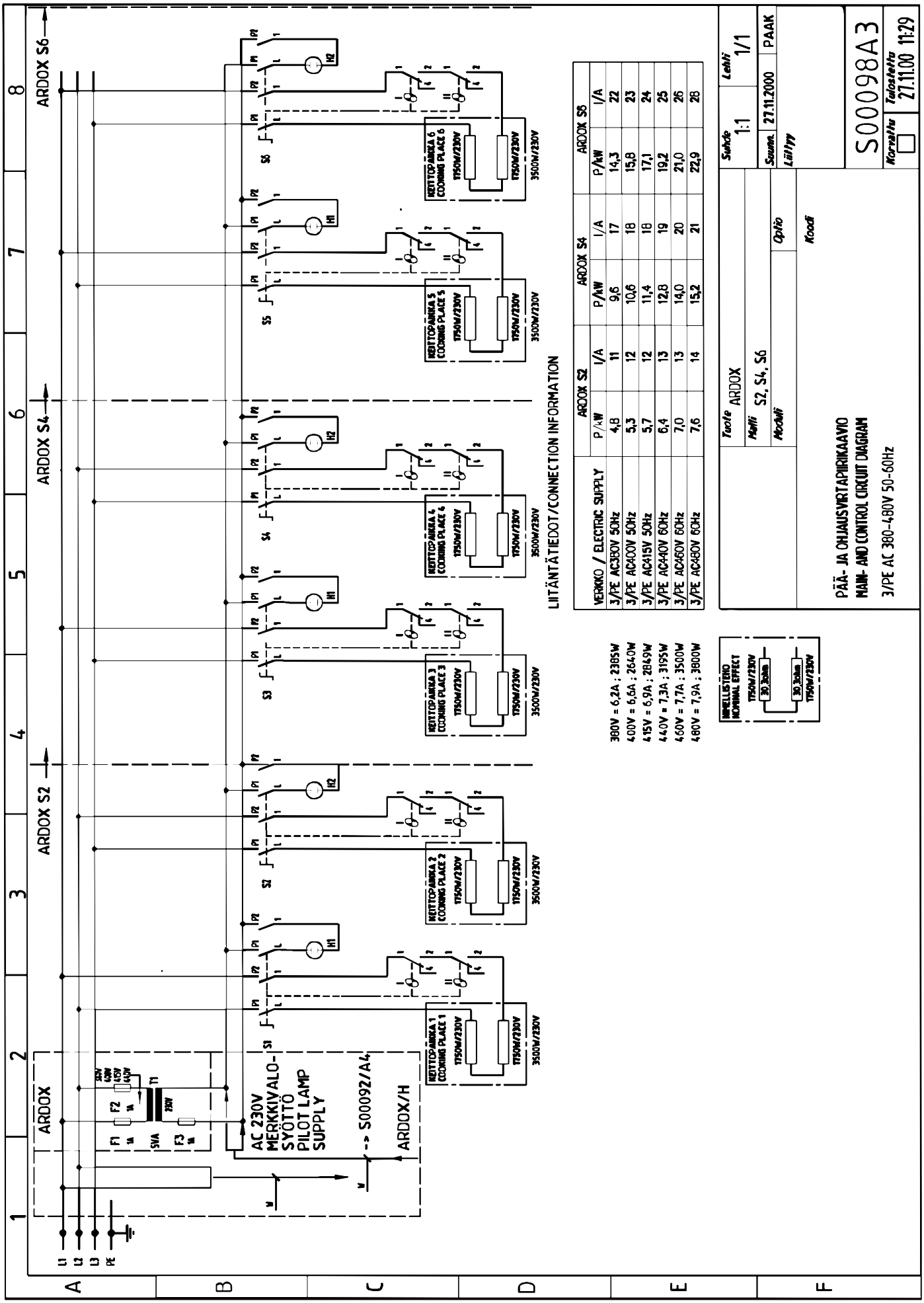

VERKKO / ELECTRIC SUPPLY	ARDOX S2 P/kW	ARDOX S2 I/A	ARDOX S4 P/kW	ARDOX S4 I/A	ARDOX S6 P/kW	ARDOX S6 I/A
3/PE AC380V 50Hz	4,8	11	9,6	17	14,3	22
3/PE AC400V 50Hz	5,3	12	10,6	18	15,8	23
3/PE AC415V 50Hz	5,7	12	11,4	18	17,1	24
3/PE AC440V 60Hz	6,4	13	12,8	19	19,2	25
3/PE AC460V 60Hz	7,0	13	14,0	20	21,0	26
3/PE AC480V 60Hz	7,6	14	15,2	21	22,9	28

Main and control circuit S00098A3

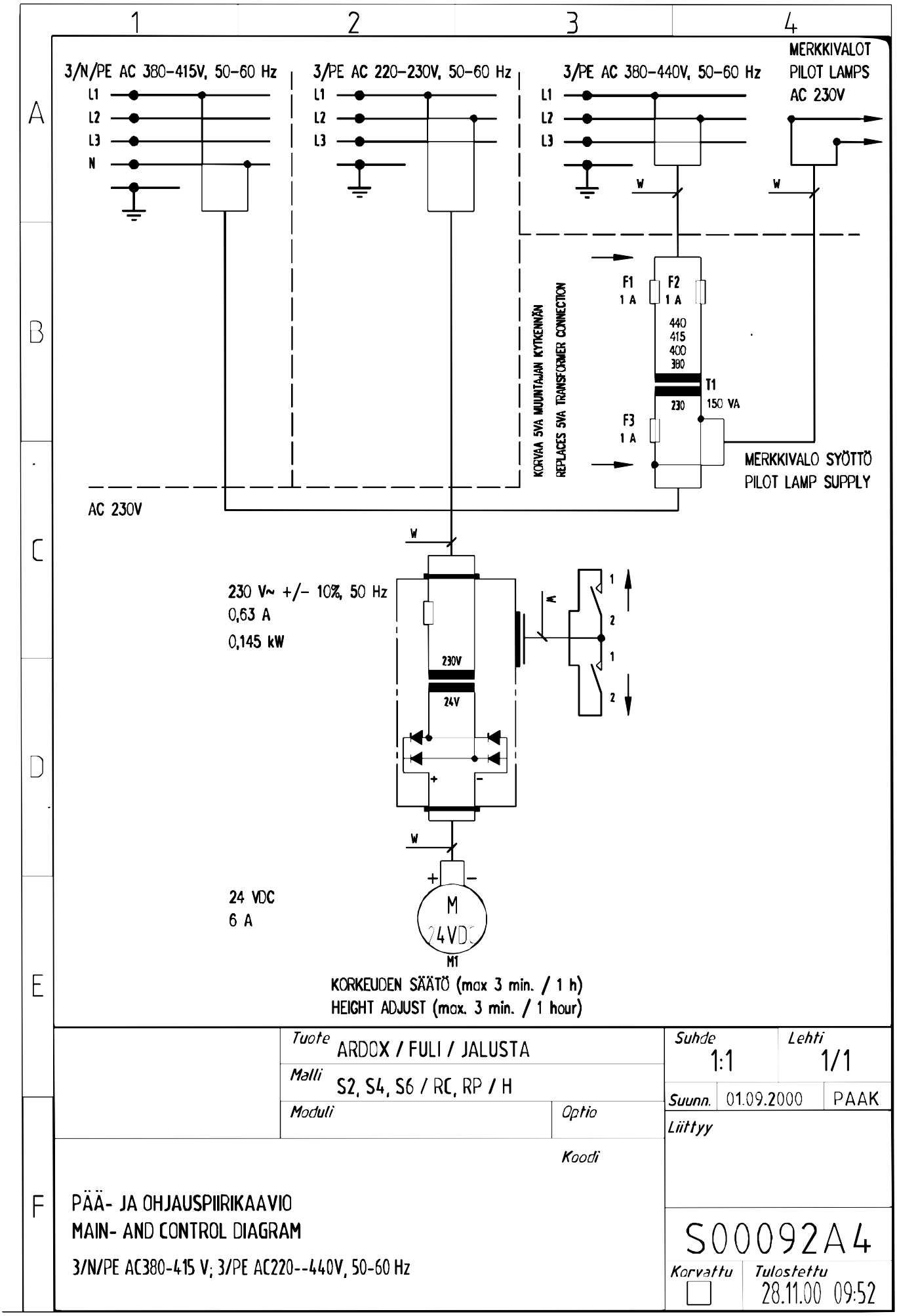

Tuote	ARDOX / FULI / JALUSTA	Suhde 1:1	Lehti 1/1
Malli	S2, S4, S6 / RC, RP / H	Suunn. 01.09.2000	PAAK
Moduli	Optio	Liittyy	
	Koodi		

PÄÄ- JA OHJAUSPIIRIKAAVIO
MAIN- AND CONTROL DIAGRAM

3/N/PE AC380-415 V; 3/PE AC220--440V, 50-60 Hz

S00092A4

Korvattu ☐ Tulostettu 28.11.00 09:52

Main and control circuit S00092A4

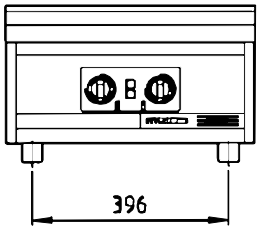

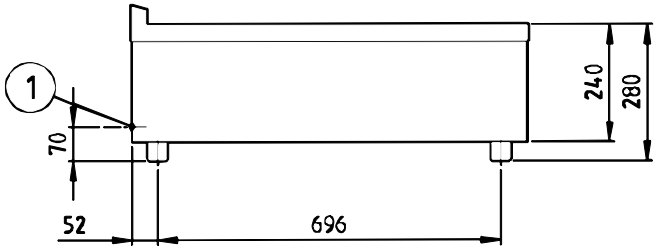

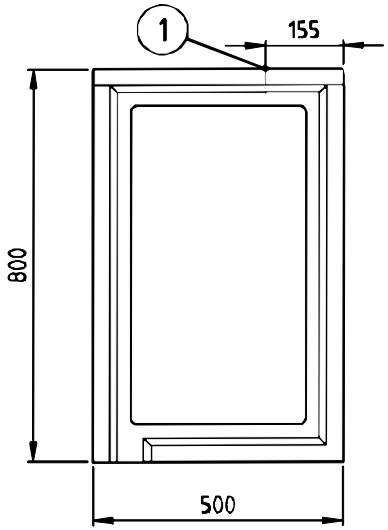

1. Sähkö / El / Electric

Laite Maskinen Maschine	Jännite Spänning Voltage	Teho (kW) Effekt Power	Virta (A) Ström Current	Sulake (A) Säkring Fuse
Ardox S2	3/N/PE AC 380/220V 50Hz	6,4	15	16
	3/N/PE AC 400/230V 50Hz	7,0	16	20
	3/N/PE AC 415/240V 50Hz	7,6	16	20
	3/PE AC 220V 50-60Hz	6,4	25	32
	3/PE AC 230V 50Hz	7,0	26	32
	3/PE AC 380V 50Hz	4,8	11	16
	3/PE AC 400V 50Hz	5,3	12	16
	3/PE AC 415V 50Hz	5,7	12	16
	3/PE AC 440V 60Hz	6,4	13	16
	3/PE AC 460V 60Hz	7,0	13	16
	3/PE AC 480V 60Hz	7,6	14	16

Huomioi myös asennusohjeen vaatimukset.
Iakttag även kraven i installationsanvisningen.
The requirements in the installation instructions must also be followed.

Rev.	Muutos	Pvm.	Suunn.
B	VIRTA-ARVOJEN / SULAKEKOKOJEN OSITTAINEN MUUTOS	23.04.1999	JCE

Tuote / Produkt / Product: ARDOX S2

Suhde / Skala / Scale: 1:10

Suunn. 23.04 1999 JCE

LIESI
SPIS
RANGE

L00041B3

Korvattu

Tulostettu 04.12.00 14:19

Installation drawing L00041B3

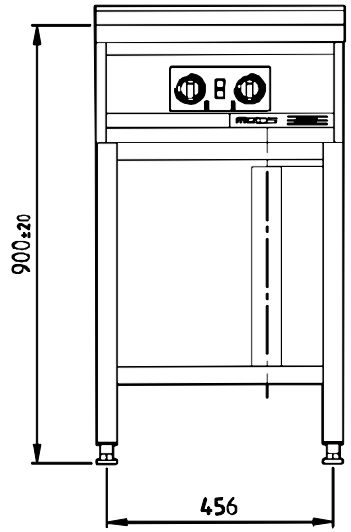

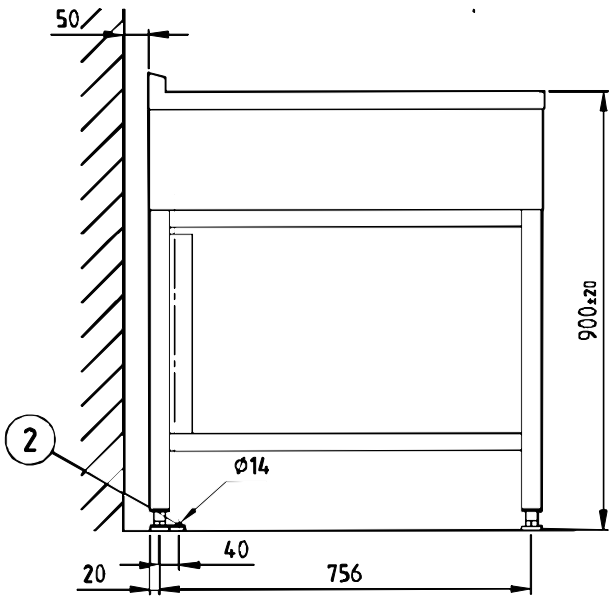

1. Sähkö
2. LAITE KIINNITETÄÄN TAKAJALOISTA LATTIAAN MARINE KAIKISTA JALOISTA

1. El
2. APPARATEN FÄSTES VID BAKFÖTTERNA MARINE ALLA FÖTTERNA

1. Electric
2. THE BACK FEET SHOULD BE FIXED MARINE ALL FEET

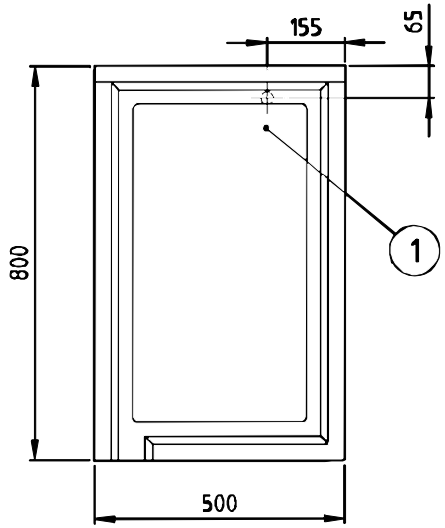

Laite Maskinen Maschine	Jännite Spänning Voltage	Teho (kW) Effekt Power	Virta (A) Ström Current	Sulake (A) Säkring Fuse
Ardox S2	3/N/PE AC 380/220V 50Hz	6,4	15	16
	3/N/PE AC 400/230V 50Hz	7,0	16	20
	3/N/PE AC 415/240V 50Hz	7,6	16	20
	3/PE AC 220V 50-60Hz	6,4	25	32
	3/PE AC 230V 50Hz	7,0	26	32
	3/PE AC 380V 50Hz	4,8	11	16
	3/PE AC 400V 50Hz	5,3	12	16
	3/PE AC 415V 50Hz	5,7	12	16
	3/PE AC 440V 60Hz	6,4	13	16
	3/PE AC 460V 60Hz	7,0	13	16
	3/PE AC 480V 60Hz	7,6	14	16

Huomioi myös asennusohjeen vaatimukset.
Iakttag även kraven i installationsanvisningen.
The requirements in the installation instructions must also be followed.

Rev.	Muutos	Pvm.	Suunn.
B	VIRTA-ARVOJEN JA SULAKEKOKOJEN OSITTAINEN MUUTOS	23.04.1999	JCE

Tuote / Produkt / Product: ARDOX S2

Suhde / Skala / Scale: 1:10

Suunn 23.04 1999 JCE

LIESI
SPIS
RANGE

L00030B3

Korvattu

Tulostettu 01.12.00 14:19

Installation drawing L00030B3

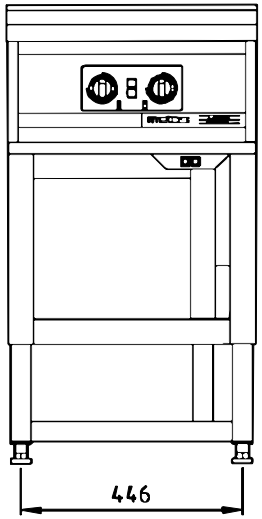

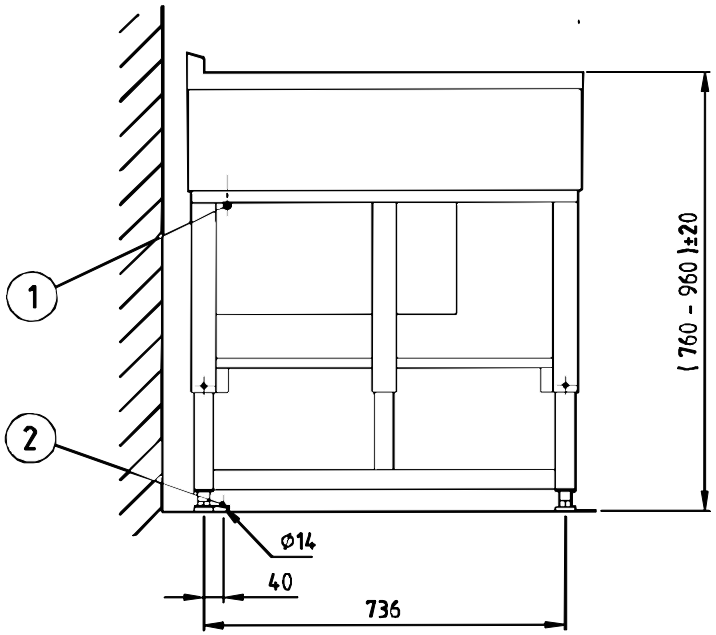

1. SÄHKÖLIITÄNTÄ
! Huomioi säätöliike (200mm) sähkökaapelin asennuksessa
2. LAITE KIINNITETÄÄN TAKAJALOISTA LATTIAAN MARINE KAIKISTA JALOISTA

1. EL-ANSLUTNING
! Iaktag regleringsrörelse (200mm) vid elkabels montering
2. APPARATEN FÄSTES VID BAKFÖTTERNA MARINE ALLA FÖTTERNA

1. ELECTRIC CONNECTION
! Observe the adjustment motion (200mm) in the installation of electric cabel
2. THE BACK FEET SHOULD BE FIXED MARINE ALL FEET

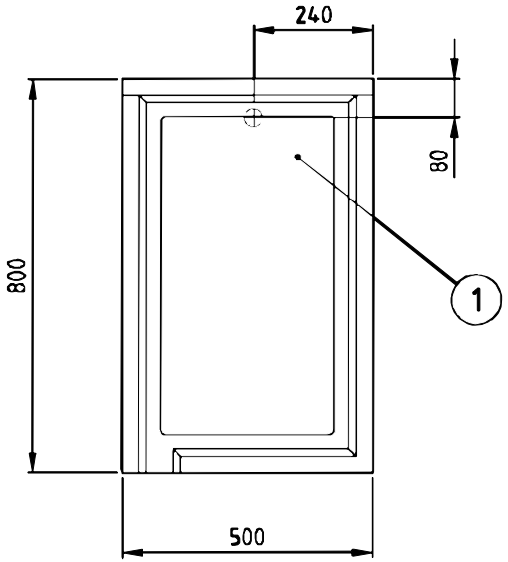

Laite Maskinen Maschine	Jännite Spänning Voltage	Teho (kW) Effekt Power	Virta (A) Ström Current	Sulake (A) Säkring Fuse
Ardox S2 H	3/N/PE AC 380/220V 50Hz	6,5	16	16
	3/N/PE AC 400/230V 50Hz	7,1	17	20
	3/N/PE AC 415/240V 50Hz	7,7	17	20
	3/PE AC 220V 50-60Hz	6,5	26	32
	3/PE AC 230V 50Hz	7,1	27	32
	3/PE AC 380V 50Hz	4,9	12	16
	3/PE AC 400V 50Hz	5,4	13	16
	3/PE AC 415V 50Hz	5,8	13	16
	3/PE AC 440V 60Hz	6,5	14	16

Huomioi myös asennusohjeen vaatimukset.
Iakttag även kraven i installationsanvisningen.
The requirements in the installation instructions must also be followed.

Tuote *Produkt* *Product* ARDOX S2 H

Suhde *Skala* *Scale* 1:10

Suunn 15 05 2000 MASO

LIESI KORKEUSSÄÄDÖLLÄ
SPIS MED HÖJDREGLERING
RANGE WITH HEIGHT ADJUST

L00082A3

Korvattu ☐ *Tulostettu* 09.05.00 16:36

Installation drawing L00082A3

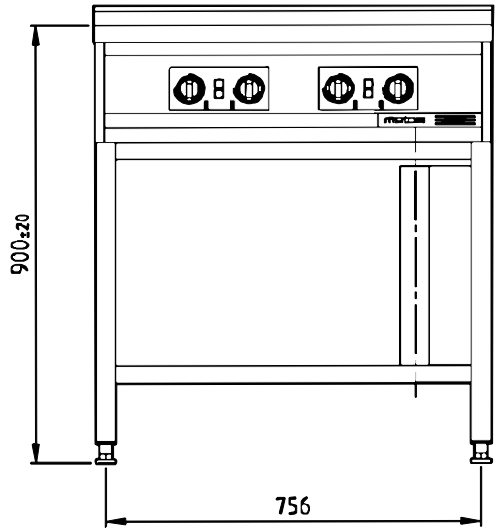

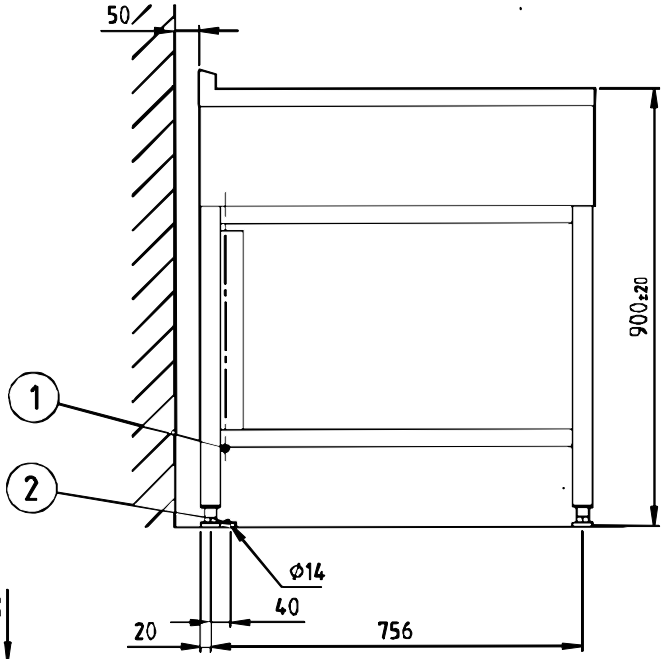

1. Sähkö
2. LAITE KIINNITETÄÄN TAKAJALOISTA LATTIAAN MARINE KAIKISTA JALOISTA

1. El
2. APPARATEN FÄSTES VID BAKFÖTTERNA MARINE ALLA FÖTTERNA

1. Electric
2. THE BACK FEET SHOULD BE FIXED MARINE ALL FEET

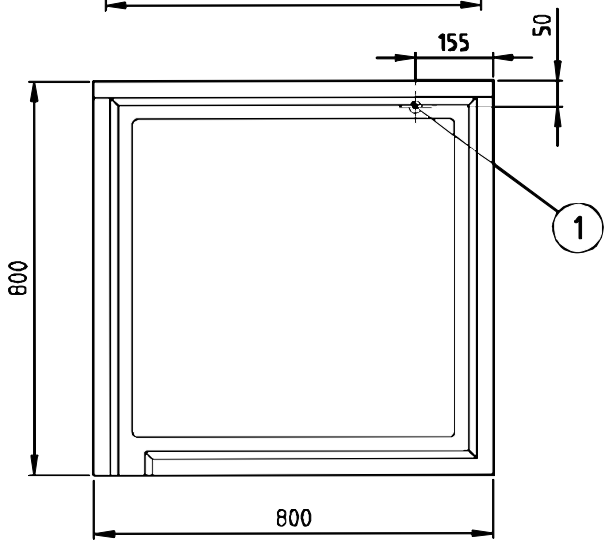

Laite Maskinen Maschine	Jännite Spänning Voltage	Teho (kW) Effekt Power	Virta (A) Ström Current	Sulake (A) Säkring Fuse
Ardox S4	3/N/PE AC 380/220V 50Hz	12,8	29	35
	3/N/PE AC 400/230V 50Hz	14,0	31	35
	3/N/PE AC 415/240V 50Hz	15,2	32	35
	3/PE AC 220V 50-60Hz	12,8	39	40
	3/PE AC 230V 50Hz	14,0	40	50
	3/PE AC 380V 50Hz	9,6	17	25
	3/PE AC 400V 50Hz	10,6	18	25
	3/PE AC 415V 50Hz	11,4	18	25
	3/PE AC 440V 60Hz	12,8	19	25
	3/PE AC 460V 60Hz	14,0	20	25
	3/PE AC 480V 60Hz	15,2	21	25

Huomioi myös asennusohjeen vaatimukset.
Iakttag även kraven i installationsanvisningen.
The requirements in the installation instructions must also be followed.

Rev.	Muutos	Pvm.	Suunn.
B	VIRTA-ARVOJEN JA SULAKEKOKOJEN OSITTAINEN MUUTOS	23.04.1999	JCE

Tuote / Produkt / Product: ARDOX S4

Suhde / Skala / Scale: 1:10

Suunn. 23.04.1999 JCE

LIESI
SPIS
RANGE

L00031B3

Korvattu

Tulostettu 01.12.00 14:16

Installation drawing L00031B3

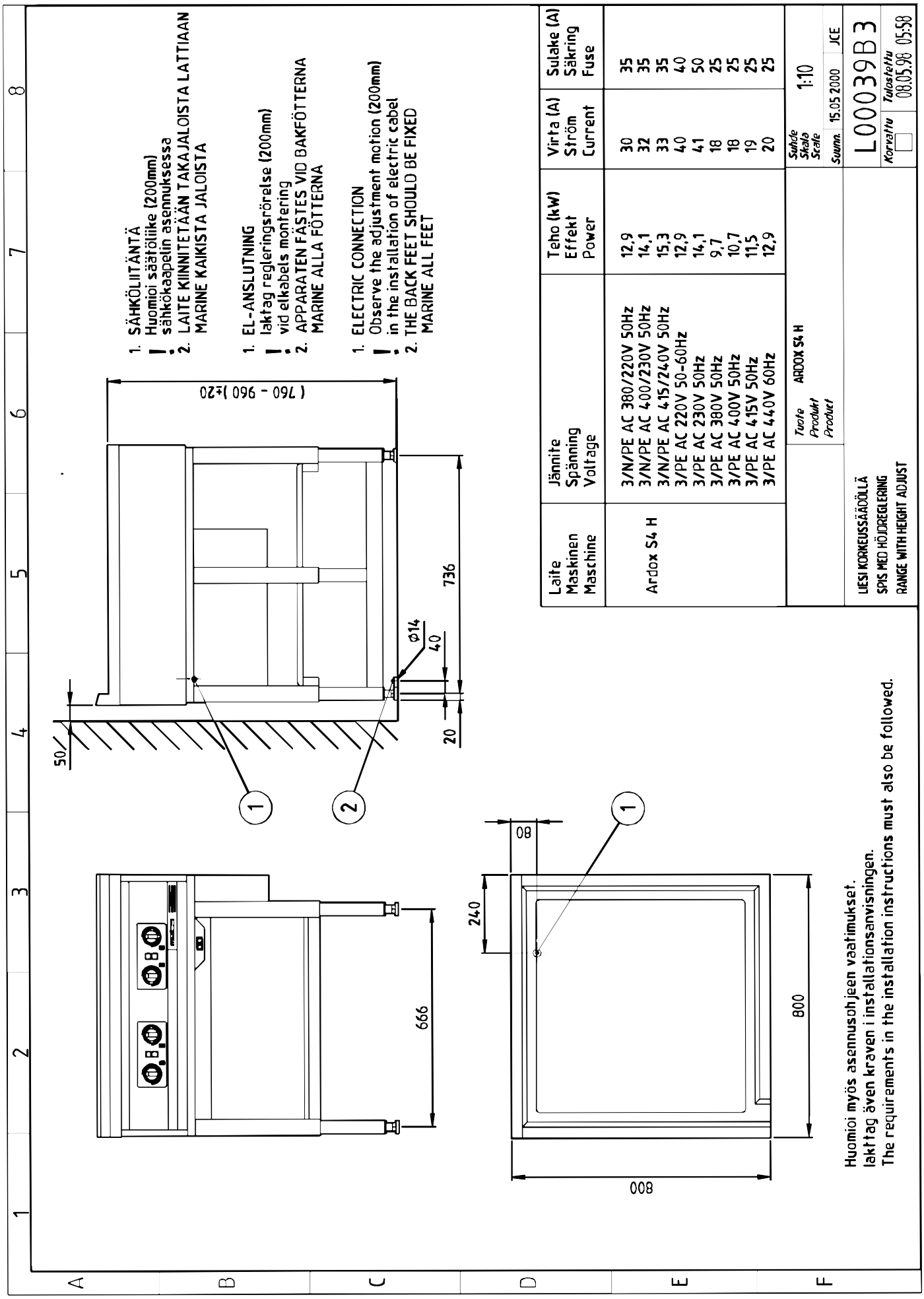

Installation drawing L00039B3

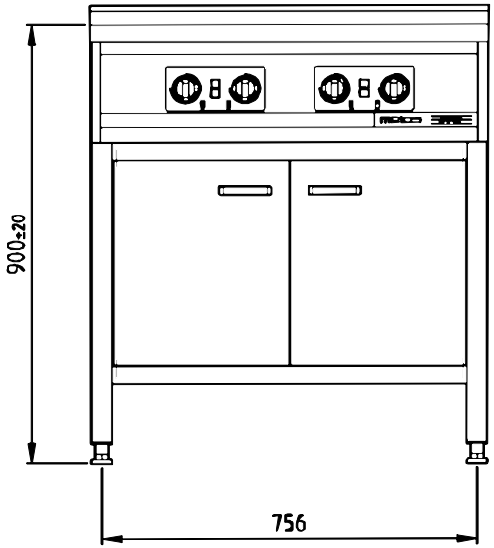

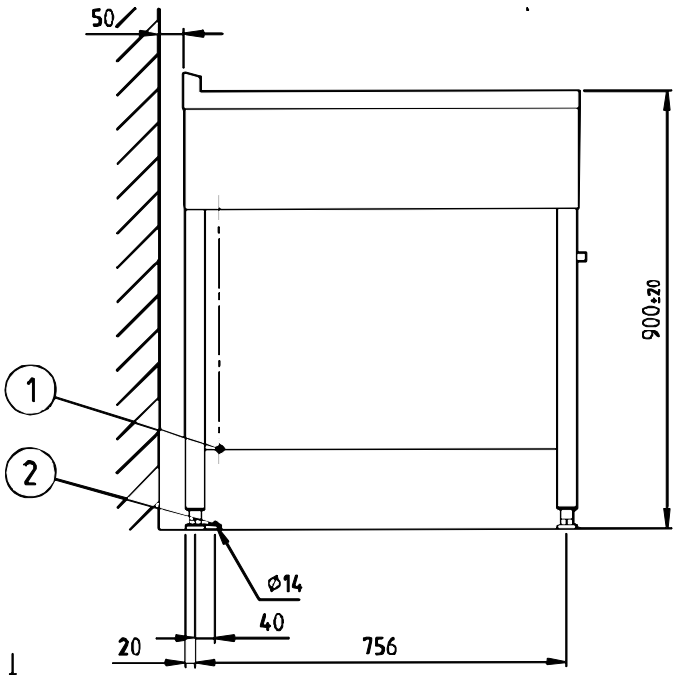

1. SÄHKÖLIITÄNTÄ
2. LAITE KIINNITETÄÄN TAKAJALOISTA LATTIAAN MARINE KAIKISTA JALOISTA

1. EL-ANSLUTNING
2. APPARATEN FÄSTES VID BAKFÖTTERNA MARINE ALLA FÖTTERNA

1. ELECTRIC CONNECTION
2. THE BACK FEET SHOULD BE FIXED MARINE ALL FEET

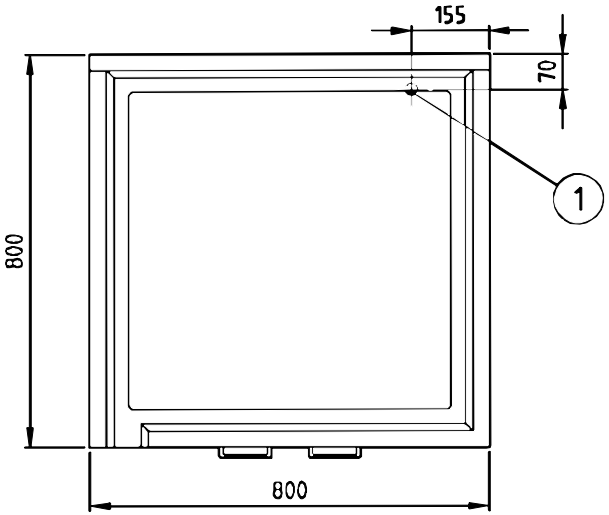

Laite Maskinen Maschine	Jännite Spänning Voltage	Teho (kW) Effekt Power	Virta (A) Ström Current	Sulake (A) Säkring Fuse
Ardox S4 D	3/N/PE AC 380/220V 50Hz	12,8	29	35
	3/N/PE AC 400/230V 50Hz	14,0	31	35
	3/N/PE AC 415/240V 50Hz	15,2	32	35
	3/PE AC 220V 50-60Hz	12,8	39	40
	3/PE AC 230V 50Hz	14,0	40	50
	3/PE AC 380V 50Hz	9,6	17	25
	3/PE AC 400V 50Hz	10,6	18	25
	3/PE AC 415V 50Hz	11,4	18	25
	3/PE AC 440V 60Hz	12,8	19	25
	3/PE AC 460V 60Hz	14,0	20	25
	3/PE AC 480V 60Hz	15,2	21	25

Huomioi myös asennusohjeen vaatimukset.
Iakttag även kraven i installationsanvisningen.
The requirements in the installation instructions must also be followed.

Tuote / Produkt / Product: ARDOX S4 D

Suhde / Skala / Scale: 1:10

Suunn. 11 05 2000 MASO

LIESI KAAPILLA
SPIS MED SKÅP
RANGE WITH CABINET

L00083A3

Korvattu

Tulostettu 01.12.00 14:24

Installation drawing L00083A3

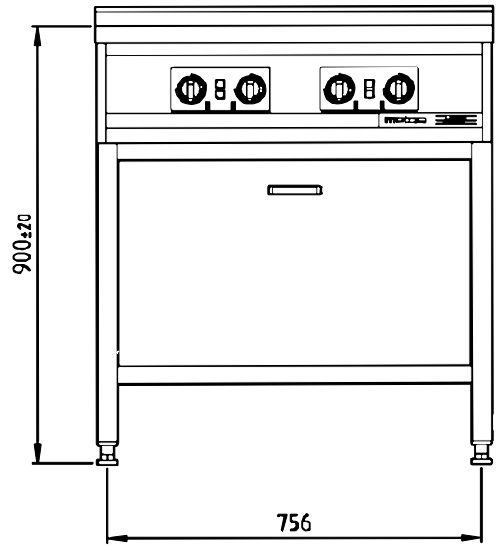

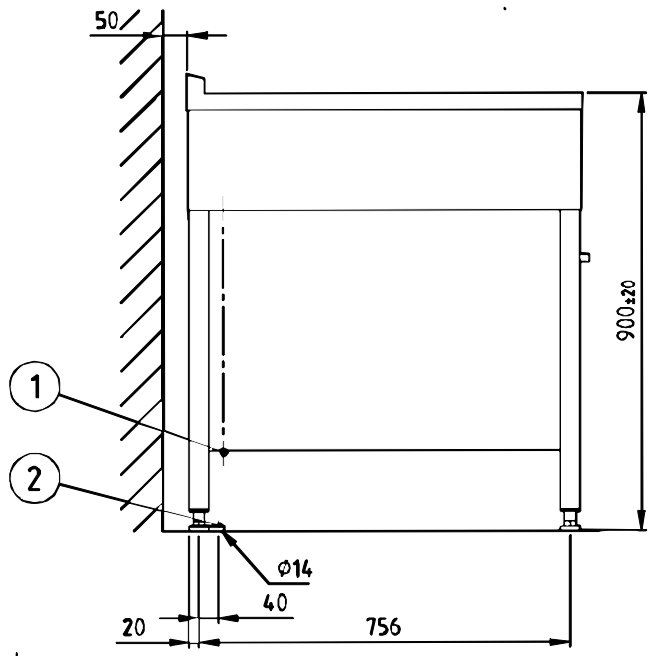

1. SÄHKÖLIITÄNTÄ
2. LAITE KIINNITETÄÄN TAKAJALOISTA LATTIAAN MARINE KAIKISTA JALOISTA

1. EL-ANSLUTNING
2. APPARATEN FÄSTES VID BAKFÖTTERNA MARINE ALLA FÖTTERNA

1. ELECTRIC CONNECTION
2. THE BACK FEET SHOULD BE FIXED MARINE ALL FEET

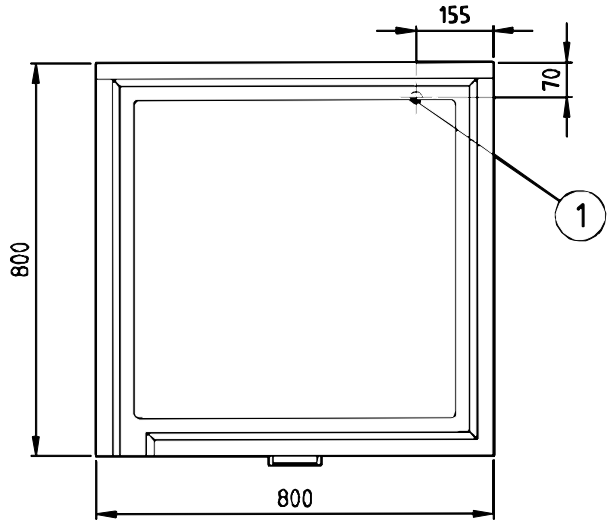

Laite Maskinen Maschine	Jännite Spänning Voltage	Teho (kW) Effekt Power	Virta (A) Ström Current	Sulake (A) Säkring Fuse
Ardox S4 B	3/N/PE AC 380/220V 50Hz	12,8	29	35
	3/N/PE AC 400/230V 50Hz	14,0	31	35
	3/N/PE AC 415/240V 50Hz	15,2	32	35
	3/PE AC 220V 50-60Hz	12,8	39	40
	3/PE AC 230V 50Hz	14,0	40	50
	3/PE AC 380V 50Hz	9,6	17	25
	3/PE AC 400V 50Hz	10,6	18	25
	3/PE AC 415V 50Hz	11,4	18	25
	3/PE AC 440V 60Hz	12,8	19	25
	3/PE AC 460V 60Hz	14,0	20	25
	3/PE AC 480V 60Hz	15,2	21	25

Huomioi myös asennusohjeen vaatimukset.
Iakttag även kraven i installationsanvisningen.
The requirements in the installation instructions must also be followed.

Tuote / Produkt / Product: ARDOX S4 B

Suhde / Skala / Scale: 1:10

Suunn: 11.05 2000 MASO

LIESI VETOLAATIKOLLA
SPIS MED LÅDA
RANGE WITH DRAWER

L00084A3

Korvattu: ☐

Tulostettu: 01.12.00 14:38

Installation drawing L00084A3

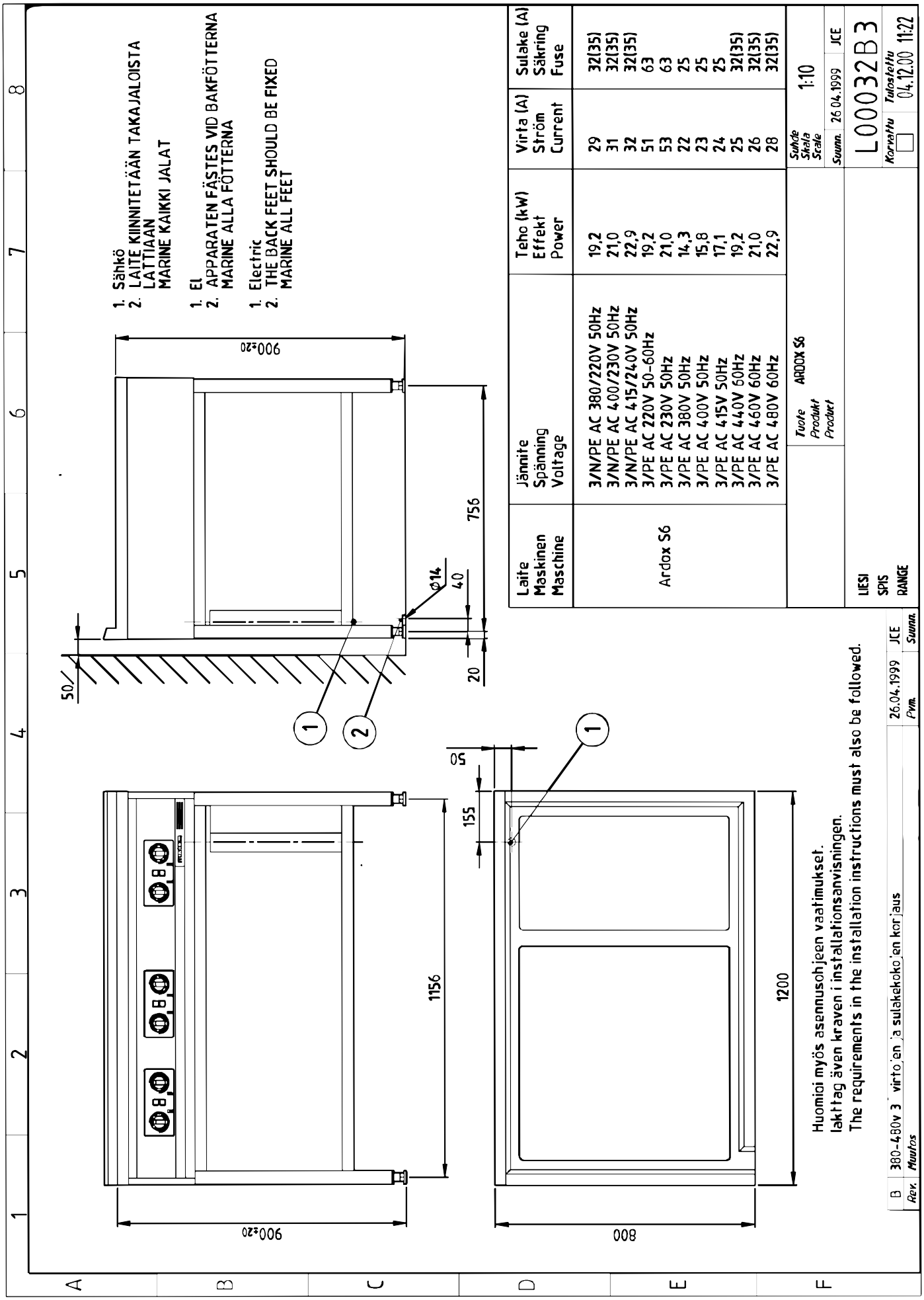

Installation drawing L00032B3

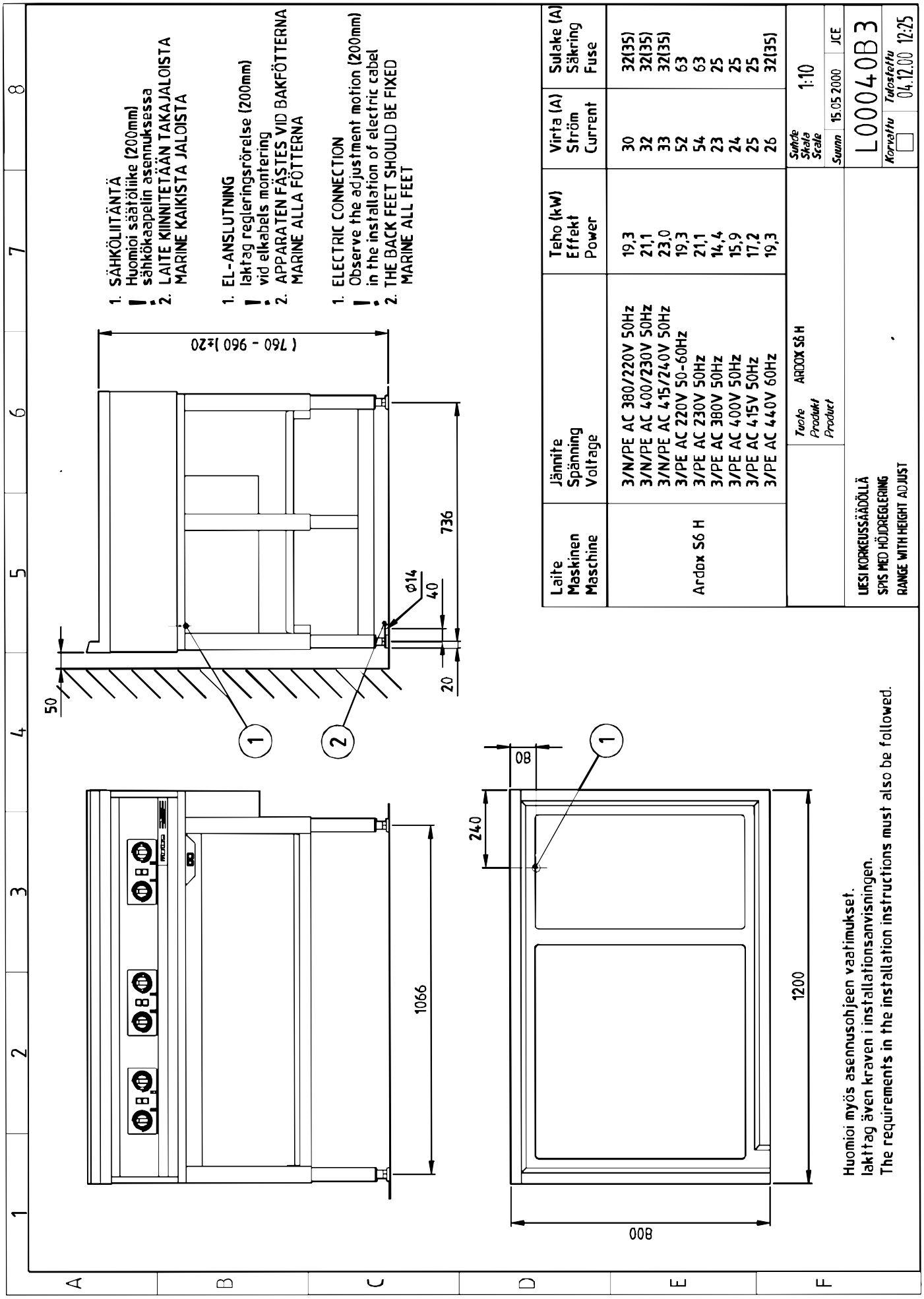

Installation drawing L00040B3

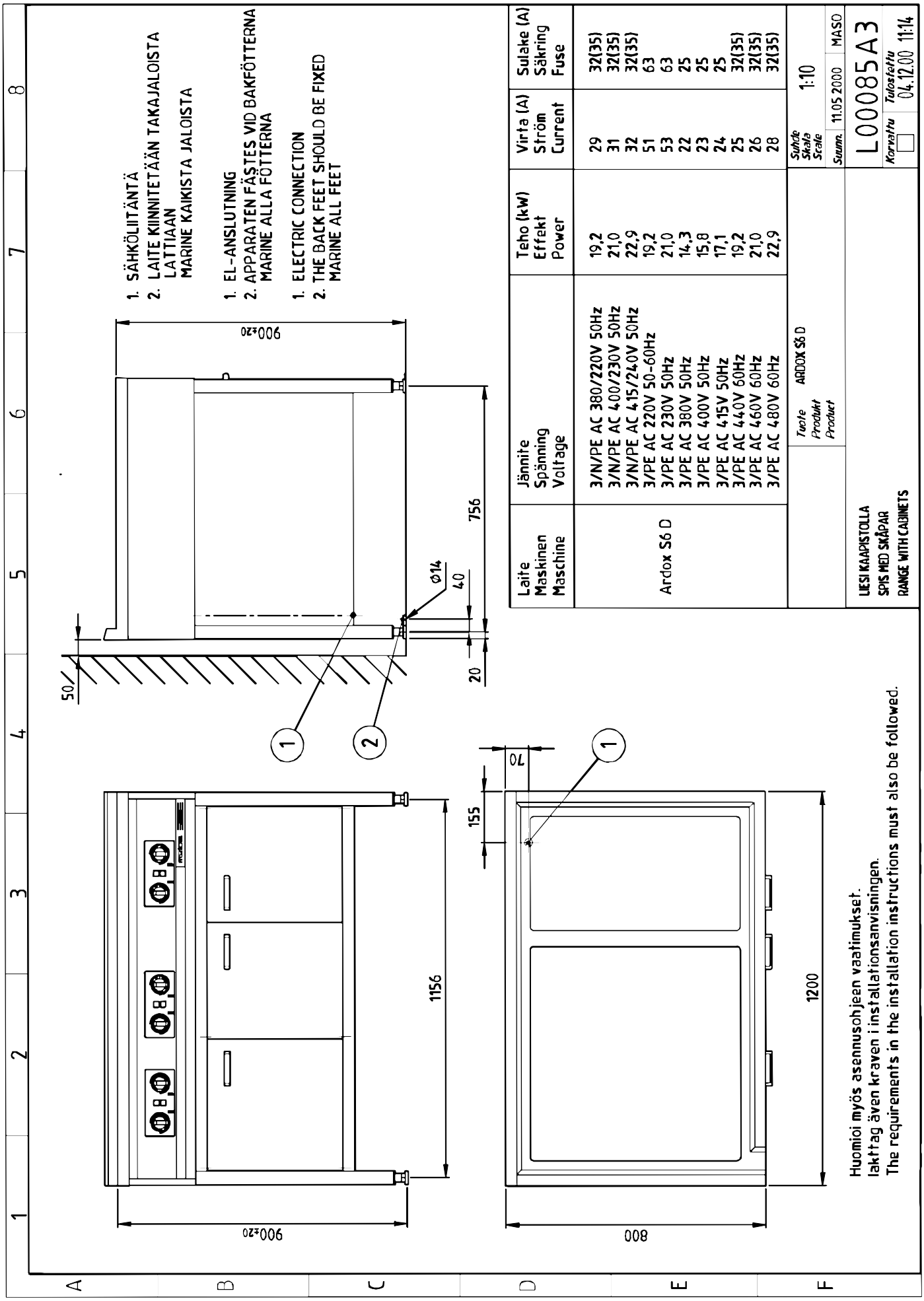

Installation drawing L00085A3

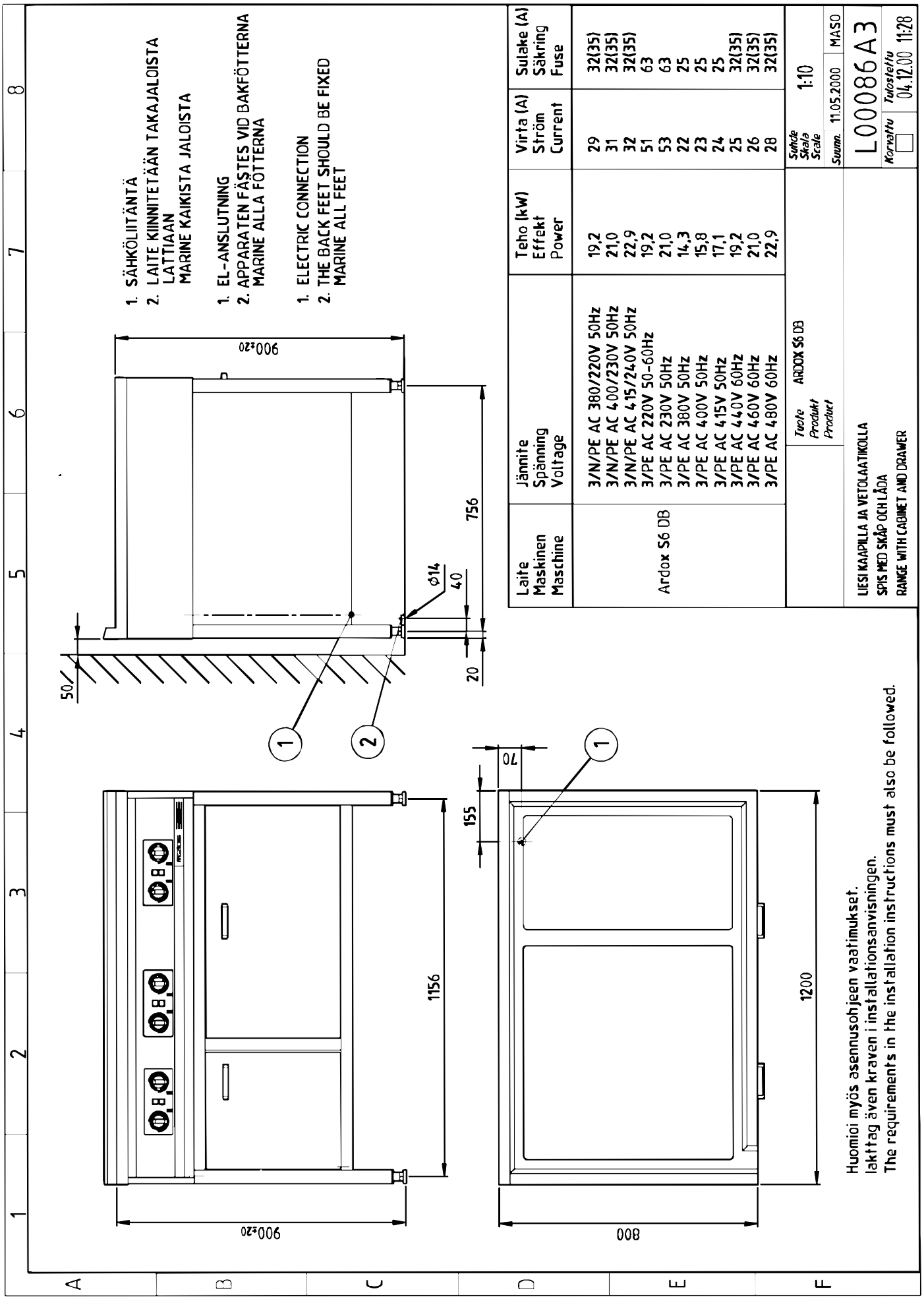

Installation drawing L00086A3

Item	Type	Accessory	Voltage	Specification
External dimensions WxDxH	2			500 x 800 x 900 mm
External dimensions WxDxH	4			800 x 800 x 900 mm
External dimensions WxDxH	6			1200 x 800 x 900 mm
Cooking zones	2			2
Cooking zones	4			4
Cooking zones	6			6
Power	2			2 x 3500 W
Power	4			4 x 3500 W
Power	6			6 x 3500 W
Power regulation				Stepless power regulator, a pilot light for each cooking zone
Material				Cooking top of chrome plated steel. All outer surfaces of stainless steel.
Weight excluding package	2	TA		abt 48 kg
Weight excluding package	2	ST		abt 58 kg
Weight excluding package	4	ST		abt 93 kg
Weight excluding package	6	ST		abt 141 kg
Weight excluding package	2	HE		abt 74 kg
Weight excluding package	4	HE		abt 112 kg
Weight excluding package	6	HE		abt 164 kg
Weight including package	2	TA		abt 65 kg
Weight including package	2	ST		abt 88 kg
Weight including package	4	ST		abt 128 kg
Weight including package	6	ST		abt 196 kg
Weight including package	2	HE		abt 104 kg
Weight including package	4	HE		abt 147 kg
Weight including package	6	HE		abt 219 kg
Package dimensions WxDxH	2	TA		560 x 920 x 400 mm
Package dimensions WxDxH	2	ST,HE		560 x 920 x 1050 mm
Package dimensions WxDxH	4	ST,HE		860 x 920 x 1050 mm
Package dimensions WxDxH	6	ST,HE		1260 x 920 x 1050 mm
Electricity connection				See installation drawing
Conditions of use				Normal kitchen conditions, above 0°C
Standard equipment				Built-in shelf
Accessories	2		A,C,G,H	Height adjustable stand
Accessories	2		I,J,K,L,M	Height adjustable stand, kettle supports, guard rail
Accessories	4,6		A,C,G,H	Sous-shelves, height adjustable stand, oven, cabinet, drawer
Accessories	4,6		I,J,K,L,M	Sous-shelves, height adjustable stand, oven, cabinet, drawer, kettle supports, guard rail

S=ARDOX S

2=2, 4=4, 6=6

TA=TABLE MODEL, ST=STAND, HE=HEIGHT ADJUSTMENT

A=3/N/PE~400/230V 50Hz, G=3/N/PE~415/240V 50Hz, H=3/PE~230V 50Hz, I=3/PE~220V 60Hz, J=3/PE~380 50Hz, K=3/PE~400V 50Hz, L=3/PE~415V 50Hz, M=3/PE~440V 60Hz

METOS AS

VAATIMUSTENMUKAISUUSVAKUUTUS
FÖRSÄKRAN OM ÖVERENSSTÄMMELSE
DECLARATION OF CONFORMITY

Valmistajan nimi / Tillverkarens namn / Manufacturer's name
METOS AS

Osoite / Adress / Adress
VALUKOJA 16
11415 TALLINN
ESTONIA

Vakuuttaa, että seuraava tuote / Försäkrar att följande produkt / Declare that the following product

Nimi, tyyppi tai malli / Namn, typ eller modell / Name, type or model
Liesi / Spis / Range ARDOX -sarja / serien / series
Mallit / Modeller / Models :
S2, S4, S6, S4/H, S6/H, S4/220, S4/240, S4/200, S6/220, S6/240, S6/200, S2 Drop-in, S4 Drop-in, S Desktop

on seuraavien direktiivien asiaankuuluvien säännösten mukainen / överensstämmer med tillämpliga bestämmelser i följande direktiv / is in conformity with the relevant provisions of the following directives

MD 2006/42/EC, LVD 2006/95/EC, EMC 2004/108/EC, RoHS 2002/95/EC, WEEE2002/96/EC

ja lisäksi vakuuttaa, että seuraavia yhdenmukaistettuja standardeja (tai niiden osia/kohtia) on sovellettu / och försäkrar dessutom att följande harmoniserade standarder (eller delar/paragrafer) har använts / and furthermore declares that the following harmonised standards (or parts/clauses) have been used

EN ISO 12100-1, EN ISO 12100-2

ja lisäksi vakuuttaa, että seuraavia muita standardeja (tai niiden osia/kohtia) on sovellettu / och försäkrar dessutom att följande andra standarder (eller delar/paragrafer) har använts / and furthermore we declare that the following other standards (or parts/clauses) have been used

EN 60204-1, EN 60335-1, EN 60335-2-36, EN 60335-2-42

Alla mainittu henkilö on valtuutettu kokoamaan teknisen tiedoston / Nedan nämda person är bemyndigad att sammanställa den tekniska dokumentfilen / The person mentioned below is authorized to compile the technical file

Valeri Bogoslovtsev Metos AS, Valukoja 16, 11415 Tallinn, Estonia

Antopaikka ja päivä / Utfärdad på ort och datum / Place and date of issue
Tallinn 01.09.2010

Valtuutetun henkilön nimi ja asema / Bemyndigad persons namn och befattning / Name and title of authorized person

Andres Kirstein – Managing Director

Jaan Muru – Production Manager