metos

COLD DISPLAY

HALO, HALO LED

Installation and Operation Manual

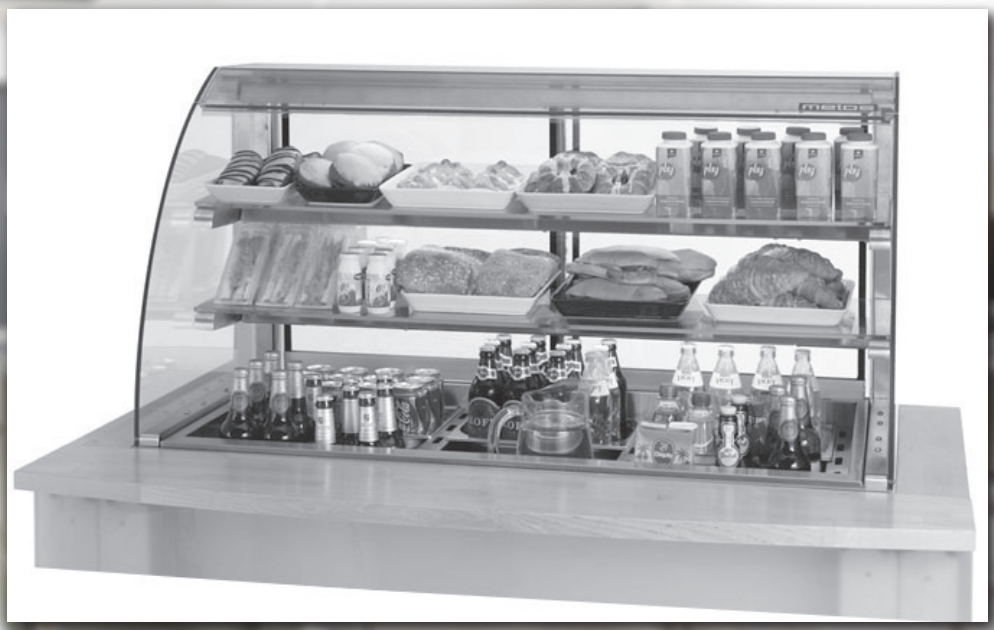

06.03.2015
Rev. 1.3

4312000, 4312002, 4312004, 4312030, 4312032, 4312034, 4312060, 4312062, 4312064, 4312100, 4312102, 4312104, 4312110, 4312112, 4312114, 4312130, 4312140, 4312132, 4312134, 4312180, 4312182, 4312184, 4312186, 4312188, 4312190, 4312286, 4312160, 4312162, 4312164, 4312170, 4312172, 4312174, 4312192, 4312194, 4312196, 4312106, 4312108, 4312200, 4312202, 4312204, 4312210, 4312212, 4312214, 4312230, 4312232, 4312234, 4312240, 4312280, 4312282, 4312284, 4312288, 4312290, 4312260, 4312262, 4312264, 4312270, 4312272, 4312274, 4312292, 4312294, 4312296, 4312206, 4312208
4312101, 4312103, 4312131, 4312133, 4312001, 4312003, 4312031, 4312033

TABLE OF CONTENTS

1. General ... 3
1.1. Symbols used in the manual ... 3
1.2. Symbols used on the appliance ... 3
1.3. Checking the relation of the appliance and the manual ... 3
2. Safety ... 4
2.1. Safe use of the appliance ... 4
2.2. Disposal of the appliance ... 4
3. Functional description ... 5
3.1. Intended use of the appliance ... 5
3.1.1. Use for other purposes ... 5
3.2. Operating principle ... 5
3.2.1. Control panel ... 5
4. Operating instructions ... 6
4.1. Operation ... 6
4.2. After use ... 7
4.2.1. Cleaning ... 7
5. Installation ... 8
5.1. Operating conditions ... 8
5.2. Transport and storage ... 8
5.3. Unpacking the appliance ... 8
5.4. Installation ... 9
5.4.1. Condenser air circulation ... 9
5.5. Electrical connections ... 10
5.6. Start-up ... 10
5.7. Temperature adjustment ... 10
6. Thermostat operation ... 10
6.1. Thermostat, cold display ... 10
6.1.1. Keylock ... 11
6.1.2. Displayeing the set point ... 11
6.1.3. Changing the set point ... 11
6.1.4. Manual defrost ... 11
6.2. Thermostat, refrigerated cupboard ... 12
7. Troubleshooting ... 13
8. Technical specifications ... 15

1. General

Carefully read the instructions in this manual as they contain important information regarding proper, efficient and safe installation, use and maintenance of the appliance.

Keep this manual in a safe place for eventual use by other operators of the appliance.

The installation of this appliance must be carried out in accordance with the manufacturer's instructions and following local regulations.

Persons using this appliance should be specifically trained in its operation.

Switch off the appliance in case of failure or malfunction. The periodical function checks requested in the manual must be carried out according to the instructions. Have the appliance serviced by a technically qualified person authorized by the manufacturer and using original spare parts.

Not complying with the above may put the safety of the appliance in danger.

1.1. Symbols used in the manual

This symbol informs about a situation where a safety risk might be at hand. Given instructions are mandatory in order to prevent injury.

This symbol informs about the right way to perform in order to prevent bad results, appliance damages or hazardous situations.

This symbol informs about recommendations and hints that help to get the best performance out of the appliance.

1.2. Symbols used on the appliance

This symbol on a part informs about electrical terminals behind the part. The removal of the part must be carried out by qualified persons only. The machine is sensitive to electrostatic discharge (ESD), which is why a static electricity wristband must be used when handling the electronics.

1.3. Checking the relation of the appliance and the manual

The rating plate of the appliance indicates the serial number of the appliance. If the manuals are missing, it is possible to order new ones from the manufacturer or the local representative. When ordering new manuals it is essential to quote the serial number shown on the rating plate.

2. Safety

2.1. Safe use of the appliance

For safe use of the appliance, observe the following safety instructions:.

- When moving or servicing the appliance, always unplug it from the power supply.
- While cleaning the appliance, be cautious not to allow the electrical devices to come into contact with water. Spraying water in the immediate vicinity of the appliance is forbidden.
- Exposing the appliance to the rain is forbidden.
- Only connect the appliance to an earthed socket.

If the appliance is not used for a long time, it should be unplugged from the power supply, cleaned and wiped dry on the inside.

2.2. Disposal of the appliance

The appliance contains parts and components, the disposal of which requires special treatment. Contact local authorities to obtain instructions on how to dispose of the appliance.

3. Functional description

3.1. Intended use of the appliance

The appliance is designed for use in serving lines, restaurants, cafés and kitchens.

The upper section and basin of the cold display are designed for short-time storage of precooled foodstuffs before distribution. The appliance is not intended for refrigerating products from higher temperatures. The cupboard of models equipped with a refrigerated cupboard is intended for cold storage of products.

The front of the Halo air curtain display is open. Keeping the products cold is ensured with effective cold air circulation.

3.1.1. Use for other purposes

Use of the appliance for any other purposes is prohibited.

Consult the manufacturer in case you intend to use the appliance for other purposes than stated above.

3.2. Operating principle

The appliance is equipped with its own refrigeration unit or it can be connected to a central unit.

3.2.1. Control panel

Control panel
1. Main switch (green)
2. Thermostat
3. Light switch (orange)

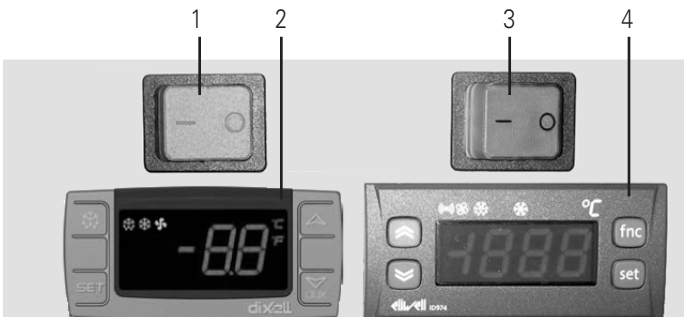

Control panel (models with refrigerated cupboard)
1. Main switch (green)
2. Thermostat, display (Dixell)
3. Light switch (orange)
4. Thermostat, refrigerated cupboard (Elliwell)

4. Operating instructions

4.1. Operation

Before putting products in the unit, wait until it has reached the temperature set with the thermostat.

Correct cold storage of foodstuffs facilitates kitchen activities and affects energy consumption.
Please observe the following points when using the appliance:

- Do not put products in the appliance until it has reached the correct operating temperature.
- Always keep the products in good order.
- Do not unnecessarily keep the cupboard door open.
- Always keep the sliding doors of the showcase properly closed.
- Do not store spoiled food in the unit.
- Dry moisture off the shelves and interior walls as needed.
- Monitor the internal temperature of the unit daily.
- Preserve the products in dishes fitted with lids or cover them with a plastic foil. This helps to keep the evaporator free from ice.

When placing products in the cupboard, sufficient air circulation should be ensured. Do not place products in touch with walls.

The appliance is equipped with automatic defrost, which means that the user does not need to bother with defrosting.

In normal conditions, the thermostat need not be adjusted. In case adjustment, however, is required, see instructions in "Installation/Temperature adjustment".

Do not adjust temperature below + 4°C.

Warm, humid summer-time may cause condensation on the exterior surfaces of the refrigerated display. Humidity is not present inside the display, so it does not damage products. The problem can be managed by slightly raising the temperature of the appliance. In general, a rise as small as 2°C will considerably decrease condensation.

4.2. After use

4.2.1. Cleaning

In normal use, the appliance does not require any other daily care than sufficient cleaning.

The interior and exterior of the appliance is mainly of stainless steel. For cleaning the interior and exterior, use neutral or slightly alkaline cleaning agents or wipe the surfaces with a damp cloth. Abrasive materials should not be used, especially not on acrylic surfaces.

Cleaning the appliance with a hose is forbidden. Do not either spray water in the immediate vicinity of the appliance, because water sprayed can get into the vent holes of the compressor cassette or into the display's electrical connections, thus causing a hazardous situation.

The inner part of the basin can be detached without tools for cleaning.

Clean the condenser (units equipped with own machinery) once a week. The machinery does not normally require any other cleaning.

Vacuum-clean the condenser by using a plastic nozzle to avoid damaging the condenser.

Before vacuum-cleaning the condenser, switch off the appliance at the power supply by unplugging the electric cable from the socket.

Other cleaning measures than the condenser cleaning should be carried out by an authorized service company.

5. Installation

5.1. Operating conditions

The appliance should not be placed in a location exposed to heavy thermal load, e.g. direct sunlight or thermal radiators. Positioning cold equipment close to bain maries and ovens should be avoided.

The appliance is designed for operation in normal ambient conditions (i.e. temperature +10°C to + 25°C, relative humidity max. 60 %).

5.2. Transport and storage

The appliance should be transported to the installation site in its transport package. Do not remove package until in the immediate vicinity of the installation place. The appliance should be transported in an upright position.

The appliance is made of polished stainless steel and of plastic/glass, so it can become scratched very easily in site conditions. Therefore, the appliance should be delivered to the installation site at a later stage of construction work. It is forbidden to use the appliance as an installation base.

The appliance should not be stored outdoors, not even in its transport package.

In case the appliance has been stored in a non-heated location so that its temperature and particularly the temperature of the machinery has fallen below 0°C, the appliance should be kept in room temperature until the machinery temperature is at least 10°C. Starting the cold machinery may damage the compressor.

In case the appliance has been heavily tilted just before the intended start-up, you should wait about 30 minutes before switching the appliance on. Otherwise the oil accumulated in the suction inlets of the compressor may damage the compressor with a hydraulic shock.

5.3. Unpacking the appliance

Remove foils protecting the stainless steel and plastic surfaces cautiously to prevent the surfaces from getting scratched.

5.4. Installation

The appliance is supplied with adjustable legs. Mount the appliance with the help of the adjustable legs in a horizontal position as accurately as possible, ensuring that the appliance rests evenly on all legs. If adjustment is not performed with great care, the door and locks may not work properly.

It is not possible to adjust an appliance fitted with wheels.

⚠ Units intended for marine use are welded in place or bolted from the mounting holes of the adjustable legs to the deck.

5.4.1. Condenser air circulation

Ensure sufficient air inlet/air circulation for the condenser.

⚠ The display should not be installed in a place where external air flow disturbs the display's air circulation. Disturbance can be caused, for example, by

- positioning of ventilation equipment
- heat sources that radiate or blow warm air towards the display's front section (not either should these be located near the display ends).

If a refrigerated display is installed in a serving line, care should be taken that there is no air gap between the unit and the tray slide, through which warm air could get into the unit's cooling air circulation (item A).

Make sure that the condenser air inlet is not blocked and that warm air can freely exit through the front section (and cannot get back into the unit).

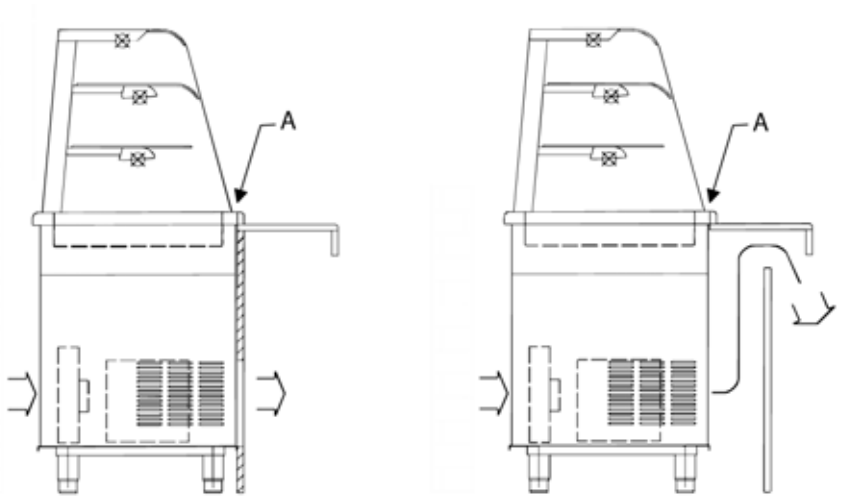

Condenser air circulation (models with refrigerated cupboard)

5.5. Electrical connections

Connect the appliance to the power supply with an earthed socket. For making the connection, a socket protected with a fuse of 16 A has to be provided for each unit.

5.6. Start-up

After connecting the appliance to the power supply, turn on the main switch (green) and make sure that the indicator light of the switch lights up. Lighting is switched on using the orange switch. The model equipped with a refrigerated cupboard has a separate main switch (green).

When the main switch is turned on, the internal temperature of the appliance is shown on the temperature display (control unit). The compressor starts operating after a short time delay.

In case you have problems with taking the appliance into use, contact an authorized service workshop.

5.7. Temperature adjustment

The temperature of the appliance is factory set to the value appropriate for each unit. This value should be altered on careful consideration only. Adjusting the temperature too low (below +4°C) may lead to rapid freezing up of the evaporator and to continuous operation of the compressor.

The appliance is fitted with an electronic control unit for temperature and defrosting. The temperature display panel and the operating switches are located on the upper section of the refrigeration unit.

6. Thermostat operation

6.1. Thermostat, cold display

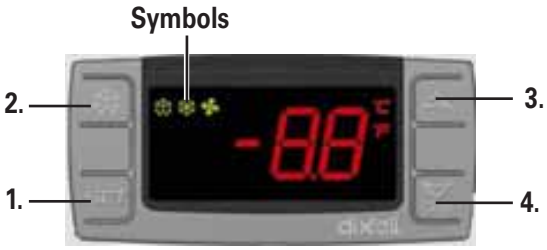

1. SET 1. Shows the set point
   2. Selects parameter or saves the value in programming mode
2. Starts manual defrost
3. Increases the value / scrolls the parameter list in programming mode.
4. Decreases the value / scrolls the parameter list in programming mode.

Keys combination

- ▽+△ To lock or unlock the keyboard
- SET+▽ To enter programming mode
- SET+△ To return to room temperature display

Symbol description

	On	Compressor enabled
	Flashing	Anti short cycle delay enabled (AC parameter)
	On	Defrost in progress
	Flashing	Dripping in progress
	On	Measurement unit
	Flashing	Programming mode
	On	Measurement unit
	Flashing	Programming mode

6.1.1. Key lock

- Keep pressed for more than 3s the UP and DOWN keys.
- The "OF" message will be displayed and the keyboard will be locked.
- If a key is pressed more than 3s the "OF" message will be displayed.

6.1.2. Displaying the set point

- Push and immediately release the SET key, the set point will be showed;
- Push and immediately release the SET key or wait about 5s to return to normal visualization..

6.1.3. Changing the set point

- Push the SET key for more than 2 seconds to change the Set point value;
- The value of the set point will be displayed and the "°C" or "°F" LED starts blinking;
- To change the Set value push the o or n arrows within 10s.
- To memorize the new set point value push the SET key again or wait 10s.

6.1.4. Manual defrost

- Push the DEF key for more than 2 seconds and a manual defrost will start

6.2. Thermostat, refrigerated cupboard

The microprocessor-based control unit contains a series of parameters to control the refrigerated display's functions. Each refrigeration unit has been pre-programmed at the factory. The user can carry out two programming functions: setting the temperature and starting a manual defrost cycle.

Keys
Press the "set" (P4) key twice to display the set value. Use the arrow UP (P1) and arrow DOWN (P2) keys to change this value. When the correct value has been selected, wait for 5 seconds to confirm this value.

A manual defrost cycle can be started by pressing and holding down the arrow UP (P1) key for about 5 seconds. The defrost indicator light L2 starts flashing.

LED indicator lights
L1 on indicates that an alarm has occurred; flashing, indicates that an alarm has been silenced.
L2 on indicates that a defrost cycle is in progress; flashing, indicates that a manual defrost cycle is in progress.
L3 on indicates that the compressor is on; flashing, indicates that there is a delay, a safety delay or a compressor switch-on block.

7. Troubleshooting

In case the appliance does not function as expected, review the following list of problems to find out if the appliance can be put in order without a service call. In all inquiries, please contact an authorized service company. Most problems can be managed on the phone.

PROBLEM	POSSIBLE CAUSE	ACTION
The appliance does not start even if the main switch is turned on.	Electrical cable is not properly plugged in the socket.	Put the cable properly in the socket.
	Defective fuse.	Replace the fuse.
The compressor is running, but the temperature does not fall to the set value. The set value is checked by pressing the SET button.	Condenser is covered by dust.	Vacuum-clean the condenser.
	Prevented air circulation beside the condenser.	Remove obstacles to ensure free air circulation.
	Products placed in a way preventing air circulation inside the cupboard.	Arrange the products so that air can circulate freely.
	Ambient temperature exceeds the maximum value (+25°C, relative humidity 60%)	Make sure that the appliance has not been placed close to a heat source. If necessary, provide mechanical ventilation.

The appliance does not contain parts that can be serviced by the user. Service must be carried out by an authorised service company.

8. Technical specifications

Refrigeration circuit diagram J06335 A

Wiring diagram S00398 B

Wiring diagram S00236 K3

Installation drawing J06367 A2

Installation drawing J06369 A2

Installation drawing J06372 A2

Installation drawing J06373 A2

Installation drawing J06376 A1

Installation drawing J06377 A1

Installation drawing J06379 A1

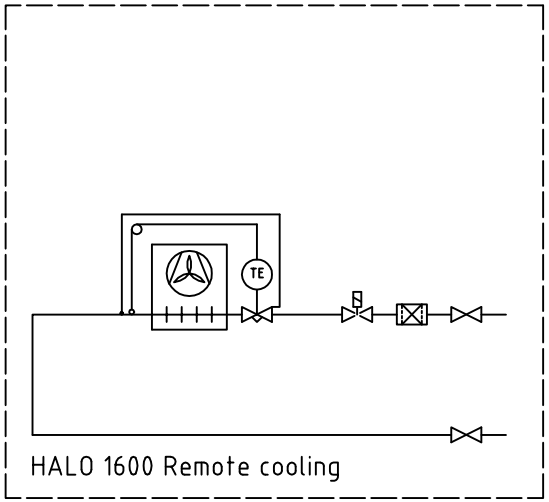

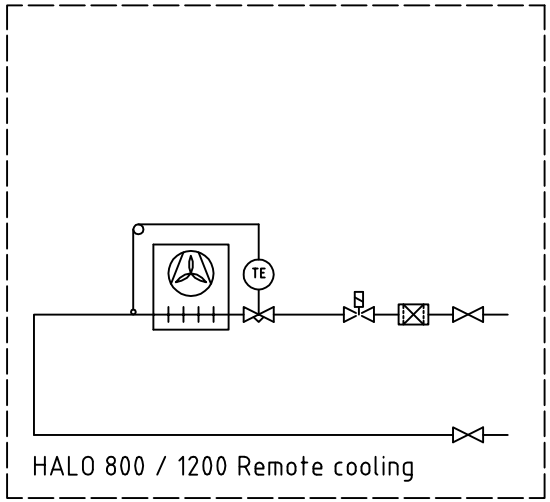

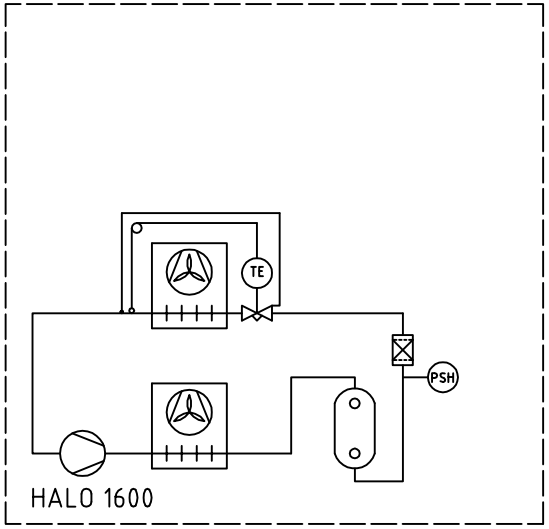

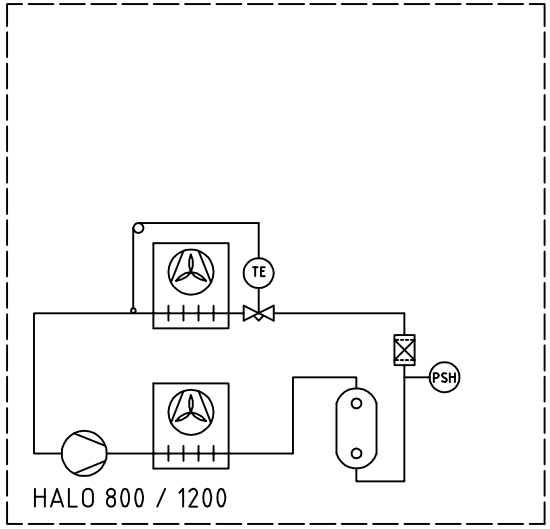

metos kitchen intelligence

Tuote | Multi -

Malli

Suhde 1:1

Suunn. 27.10.2006 HEVI

REFEGERATION CIRCUIT DIAGRAM

Koodi

HALO

J06335 A

Tulostettu 27.10.2006 10:17

Toleroimattomat mitat LT06031

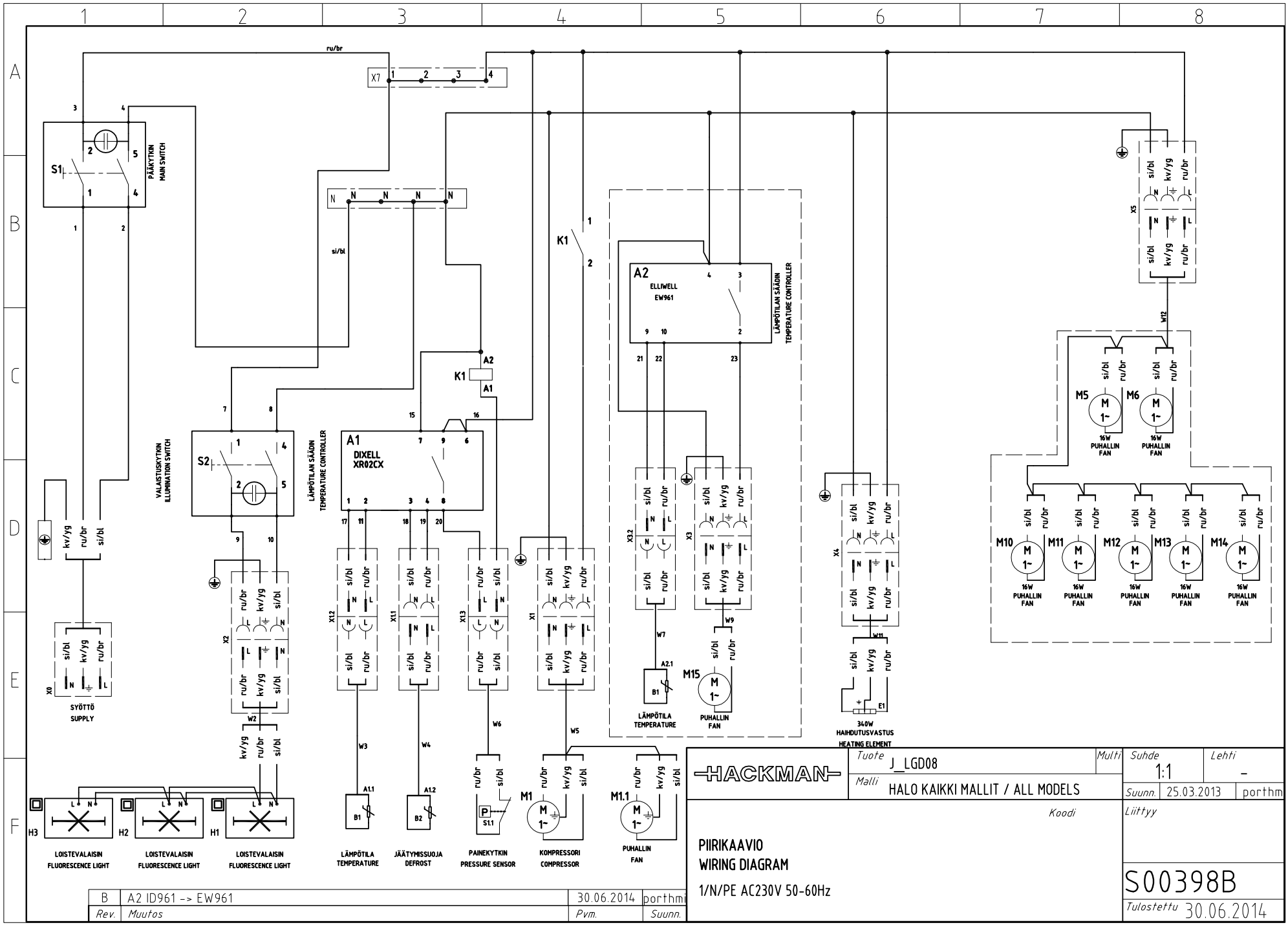

Rev.	Muutos	Pvm.	Suunn.
B	A2 ID961 -> EW961	30.06.2014	porthmi

HACKMAN

Tuote	J_LGD08	Multi	
Malli	HALO KAIKKI MALLIT / ALL MODELS		
Koodi			

Suhde	Lehti
1:1	-
Suunn. 25.03.2013	porthm

Liittyy

PIIRIKAAVIO
WIRING DIAGRAM

1/N/PE AC230V 50-60Hz

S00398B

Tulostettu 30.06.2014

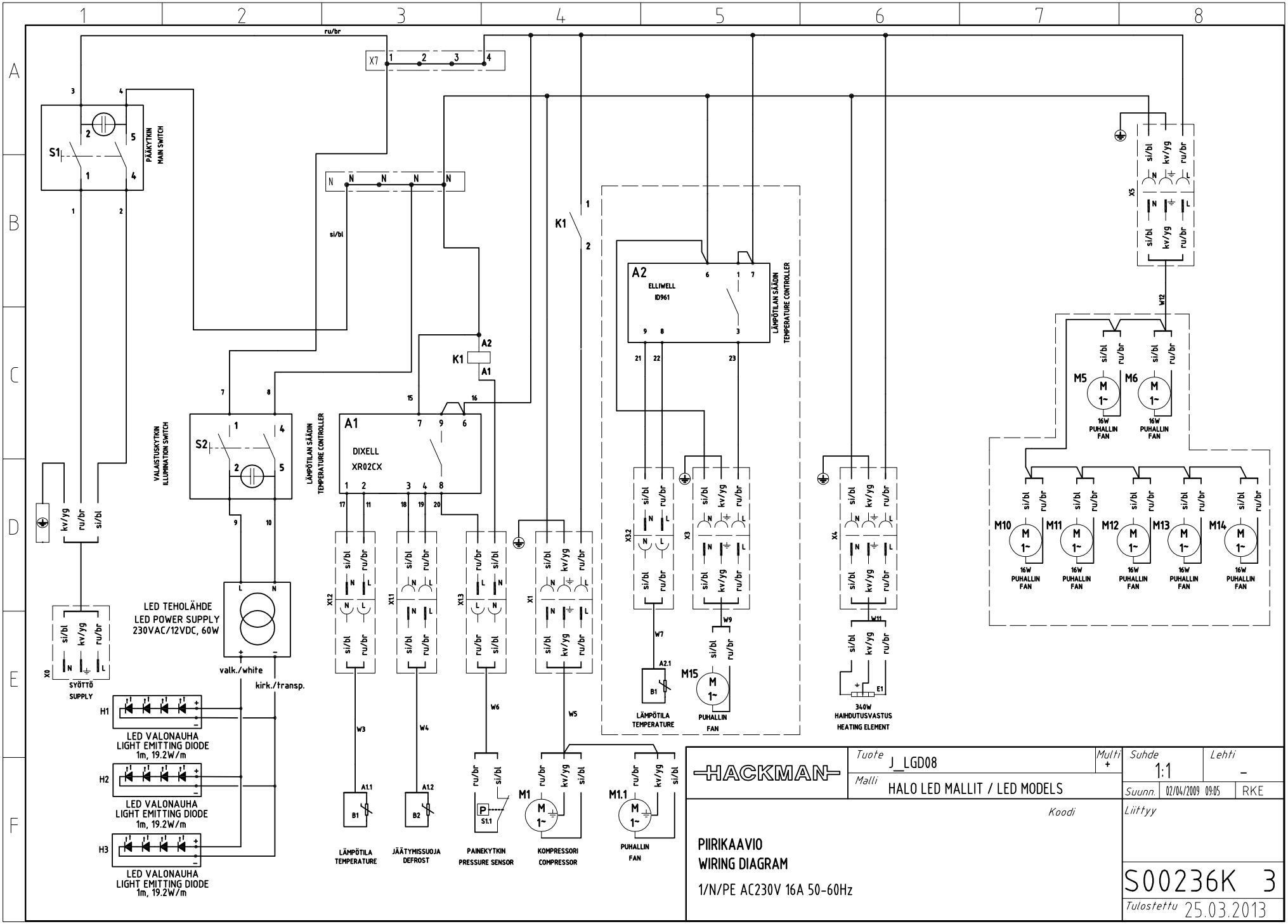
S1
PÄÄKYTKIN
MAIN SWITCH
S2
VALAISTUSKYTKIN
ILLUMINATION SWITCH
A1
DIXELL
XR02CX
LÄMPÖTILAN SÄÄDIN
TEMPERATURE CONTROLLER
A2
ELLIWELL
ID961
LÄMPÖTILAN SÄÄDIN
TEMPERATURE CONTROLLER
K1
LED TEHOLÄHDE
LED POWER SUPPLY
230VAC/12VDC, 60W
SYÖTTÖ
SUPPLY
valk./white
kirk./transp.
H1
H2
H3
LED VALONAUHA
LIGHT EMITTING DIODE
1m, 19.2W/m
LÄMPÖTILA
TEMPERATURE
JÄÄTYMISSUOJA
DEFROST
PAINEKYTKIN
PRESSURE SENSOR
KOMPRESSORI
COMPRESSOR
PUHALLIN
FAN
LÄMPÖTILA
TEMPERATURE
PUHALLIN
FAN
340W
HAIHDUTUSVASTUS
HEATING ELEMENT
16W
PUHALLIN
FAN
HACKMAN
Tuote J_LGD08
Malli HALO LED MALLIT / LED MODELS
Koodi
Multi +
Suhde 1:1
Lehti –
Suunn. 02/04/2009 09:05 RKE
Liittyy
PIIRIKAAVIO
WIRING DIAGRAM
1/N/PE AC230V 16A 50-60Hz
S00236K 3
Tulostettu 25.03.2013

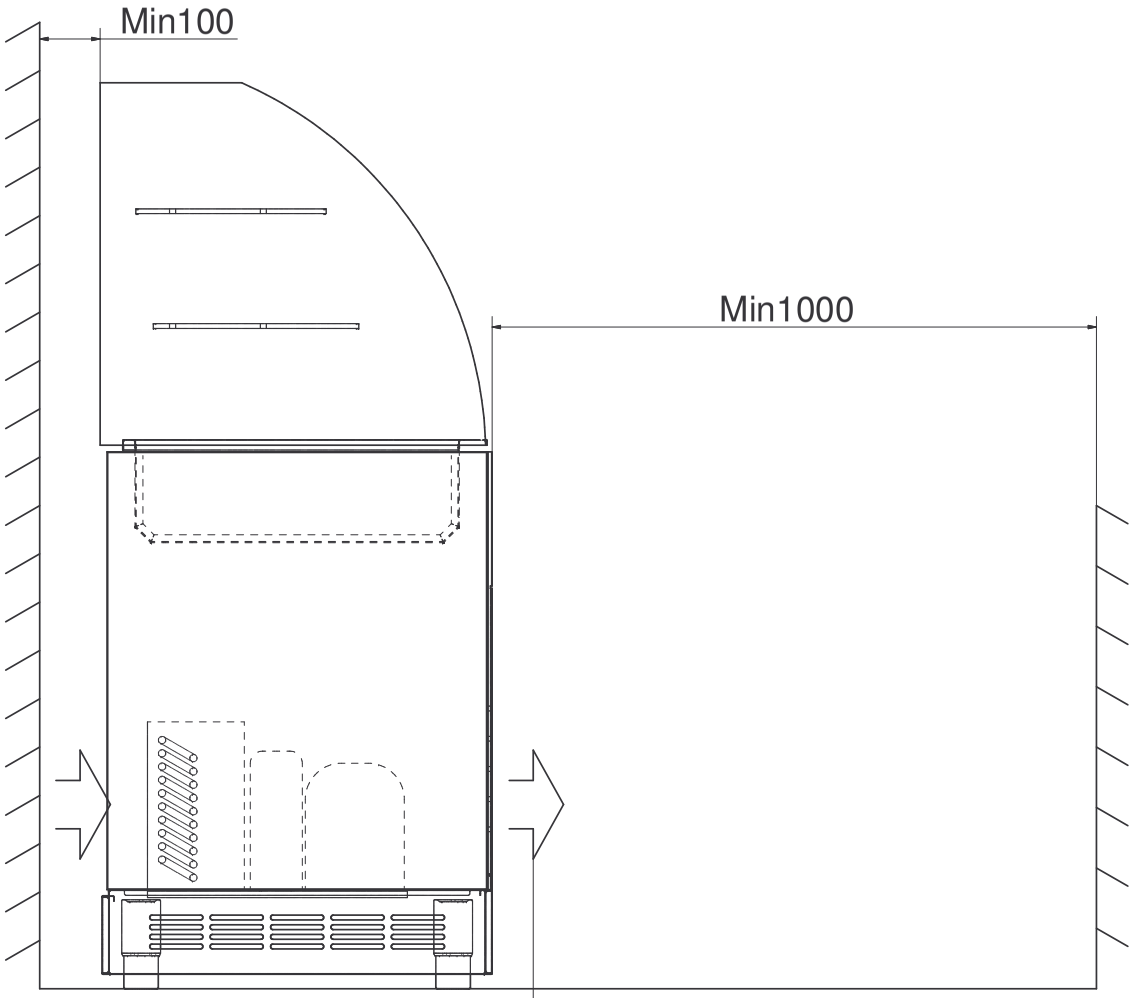

Osa	Nimitys1	Nimitys2	Koodi	Kpl	Määrä	Materiaali	Piir. nro
metos		Tuote J_LGD12			-	Suhde	
		Malli				Suunn. 25.10.2006	HEVI

ASENNUSOHJE
INSTALLATION RITNING
INSTALLATION DRAWING

Koodi J06329

J06367 A 2

Tulostettu 12.4.2005 00:00

A Toleroimattomat mitat LT06031

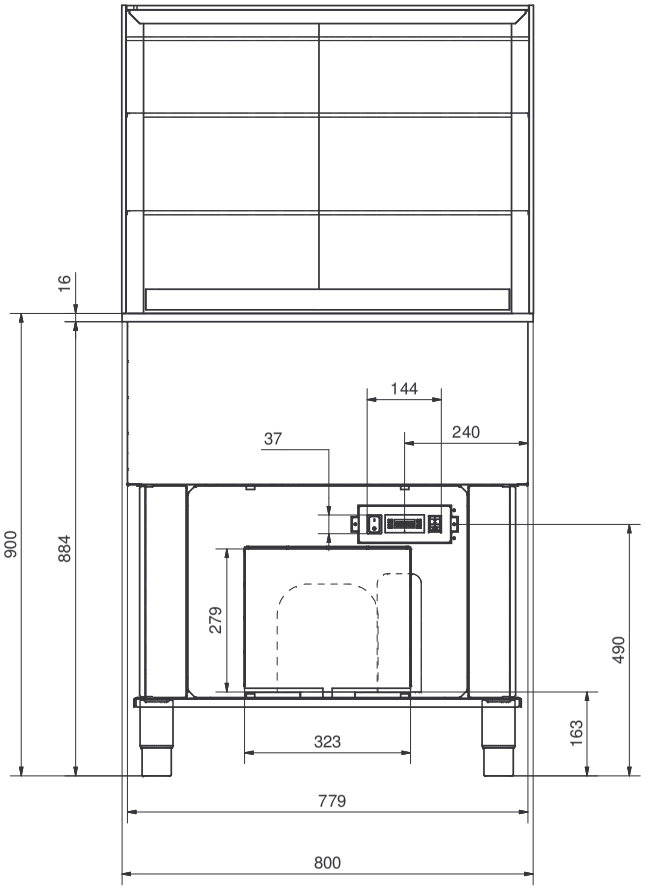

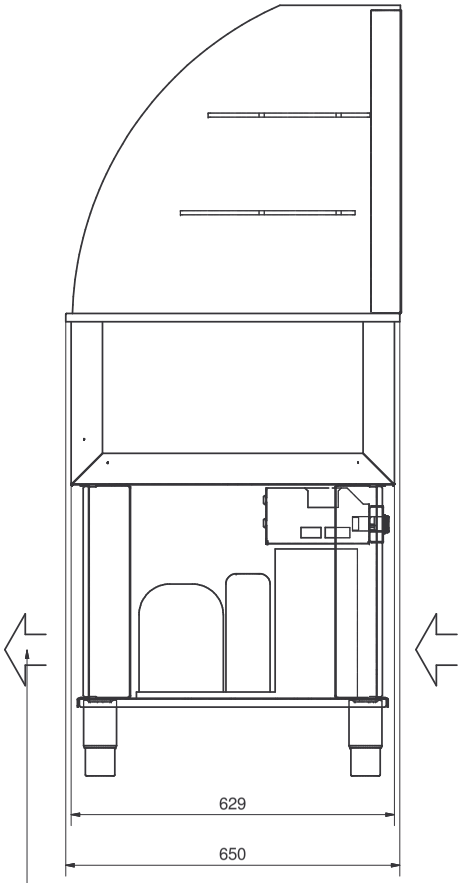

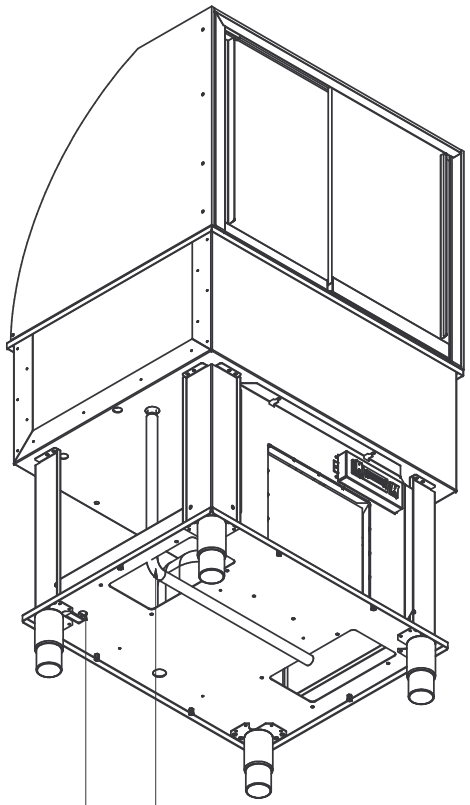

Viemäröinti - muoviletku ⌀19/25 L~2m
Avlopp - plastslang ⌀19/25 L~2m
Drain - plastic tube ⌀19/25 L~2m

Liitäntäjohto L=3m
Anslutningsledning L=3m
Connection cable L=3m
1/N/PE AC230V 50-60Hz

Lauhdutusilmankierto
Luft cirkulation
Air circulation

Osa	Nimitys1	Nimitys2	Koodi	Kpl	Määrä	Materiaali	Piir. nro
metos	Tuote J_LGD08				-	Suhde	
	Malli					Suunn. 2.11.2006 HEVI	

HALO ASENNUSOHJE
INSTALLATION RITNING
INSTALLATION DRAWING

Koodi J06325

J06369 A 2

Tulostettu 12.4.2005 00:00

A Toleroimattomat mitat LT06031

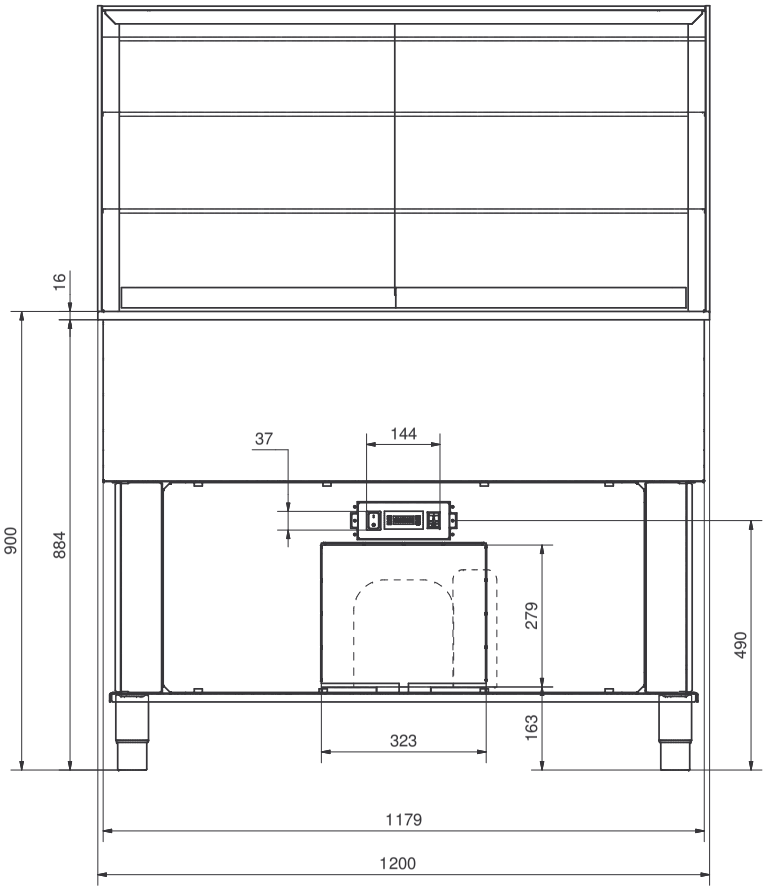

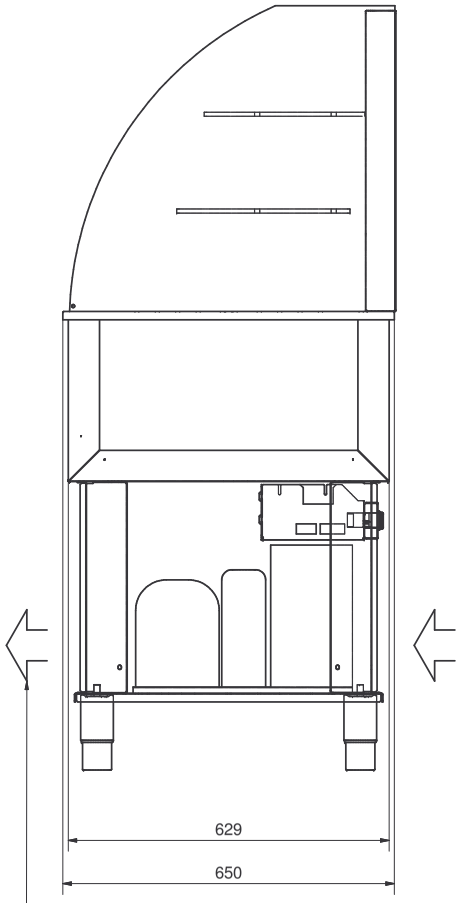

Lauhdutusilmankierto
Luft cirkulation
Air circulation

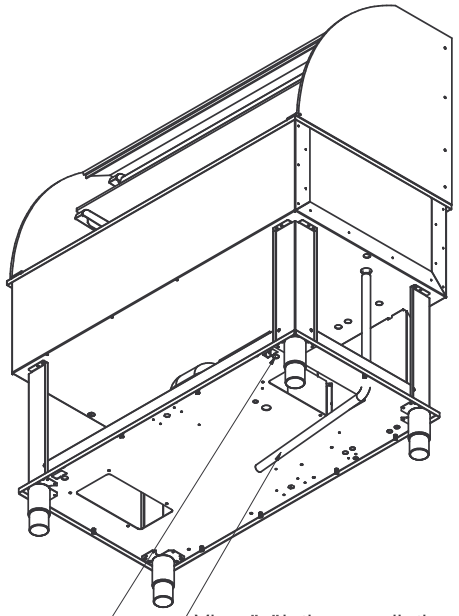

Viemäröinti - muoviletku ⌀19/25 L~2m
Avlopp - plastslang ⌀19/25 L~2m
Drain - plastic tube ⌀19/25 L=2m

Liitäntäjohto L=3m
Anslutningsledning L=3m
Connection cable L=3m
1/N/PE AC230V 50-60Hz

Osa	Nimitys1	Nimitys2	Koodi	Kpl	Määrä	Materiaali	Piir. nro
		Tuote J_LGD12			-	Suhde	
		Malli				Suunn. 2.11.2006	HEVI

HALO ASENNUSOHJE
INSTALLATION RITNING
INSTALLATION DRAWING

Koodi J06324

J06372 A 2

Tulostettu 12.4.2005 00:00

A Toleroimattomat mitat LT06031

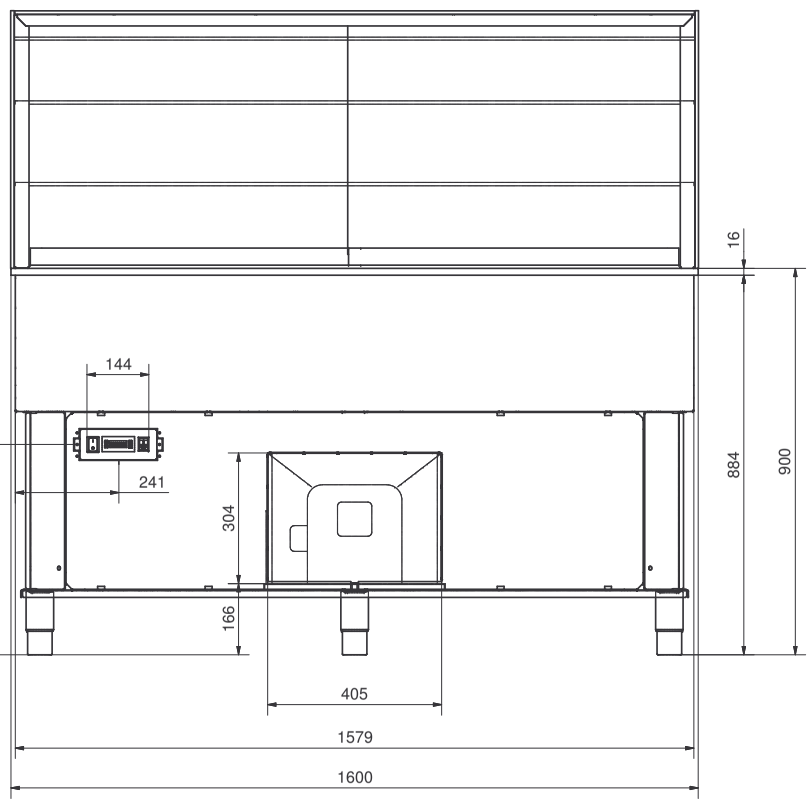

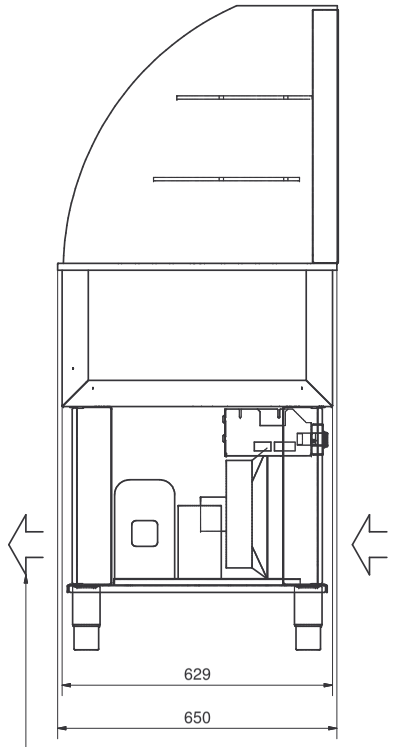

Lauhdutusilmankierto
Luft cirkulation
Air circulation

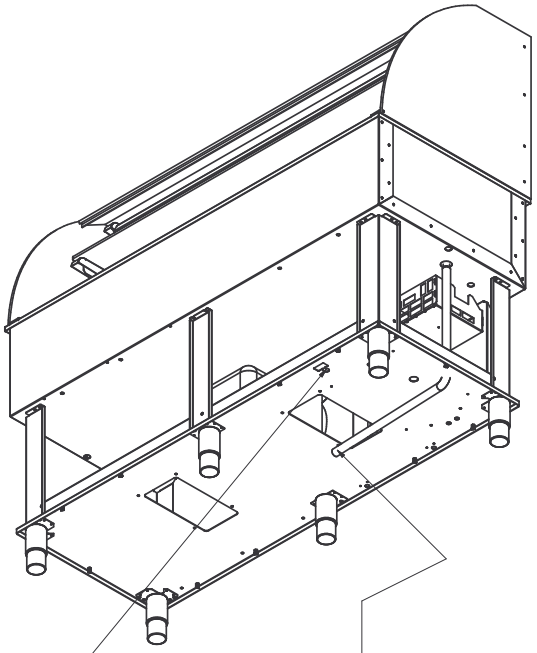

Viemäröinti - muoviletku ø19/25 L~2m
Avlopp - plastslang ø19/25 L~2m
Drain - plastic tube ø19/25 L~2m

Liitäntäjohto L=3m
Anslutningsledning L=3m
Connection cable L=3m
1/N/PE AC230V 50-60Hz

Osa	Nimitys1	Nimitys2	Koodi	Kpl	Määrä	Materiaali	Piir. nro
	metos	Tuote J_LGD16			-	Suhde	
		Malli				Suunn. 2.11.2006	HEVI

HALO ASENNUSOHJE
INSTALLATION RITNING
INSTALLATION DRAWING

Koodi J06322

J06373 A 2

Tulostettu 12.4.2005 00:00

A Toleroimattomat mitat LT06031

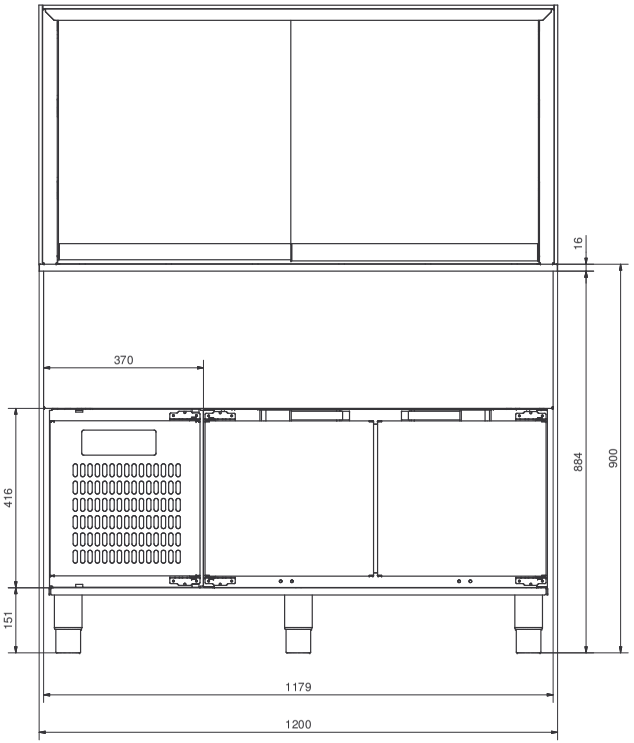

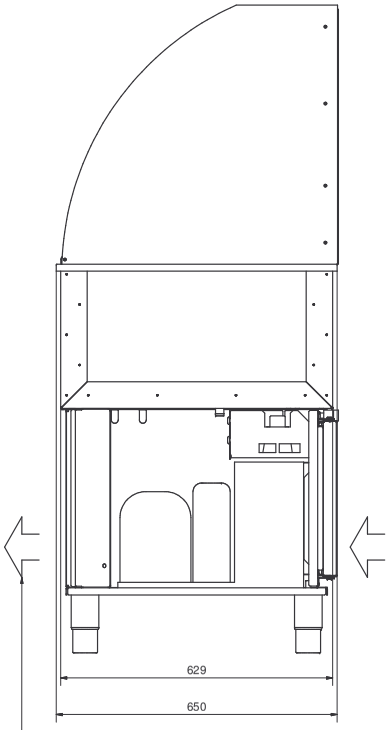

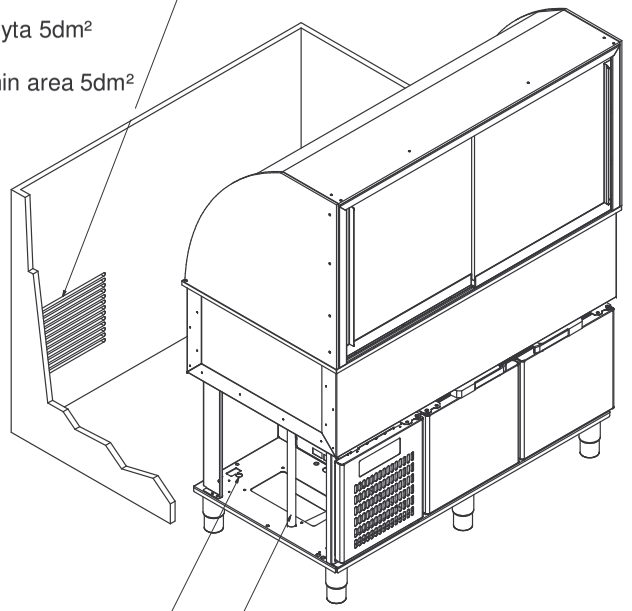

Osa	Nimitys1	Nimitys2	Koodi	Kpl	Määrä	Materiaali	Piir. nro
metos		Tuote J_LGD12			-	Suhde	
		Malli				Suunn 6.11.2006	HEVI
ASENNUSOHJE INSTALLATION RITNING INSTALLATION DRAWING			Koodi J06329			J06377 A 1	
						Tulostettu 12.4.2005 00:00	
					A	Tolerdimattomat mitat LT06031	

Aukotus lauhdutusilmankiertoa varten.
Aukkojen pinta-alan oltava min.7dm²

Hål för luftcirkulation,min yta 7dm²

Holes for air circulation,min area 7dm²

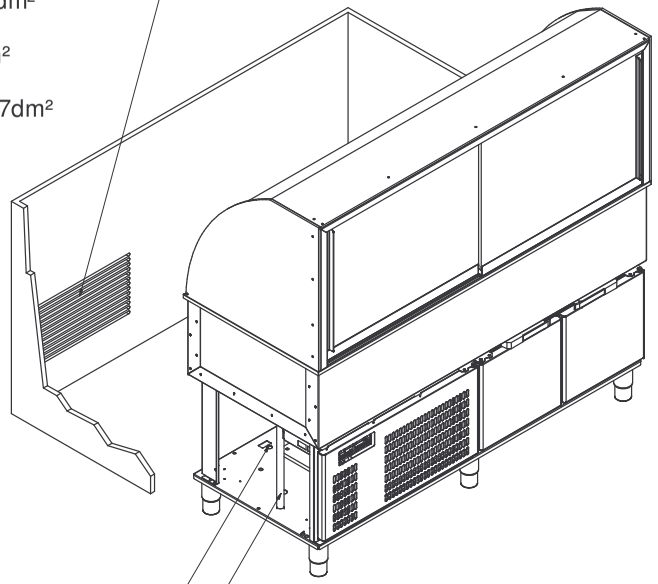

Viemäröinti - muoviletku ⌀19/25 L~2m
Avlopp - plastslang ⌀19/25 L~2m
Drain - plastic tube ⌀19/25 L~2m

Liitäntäjohto L=3m
Anslutningsledning L=3m
Connection cable L=3m
1/N/PE AC230V 50-60Hz

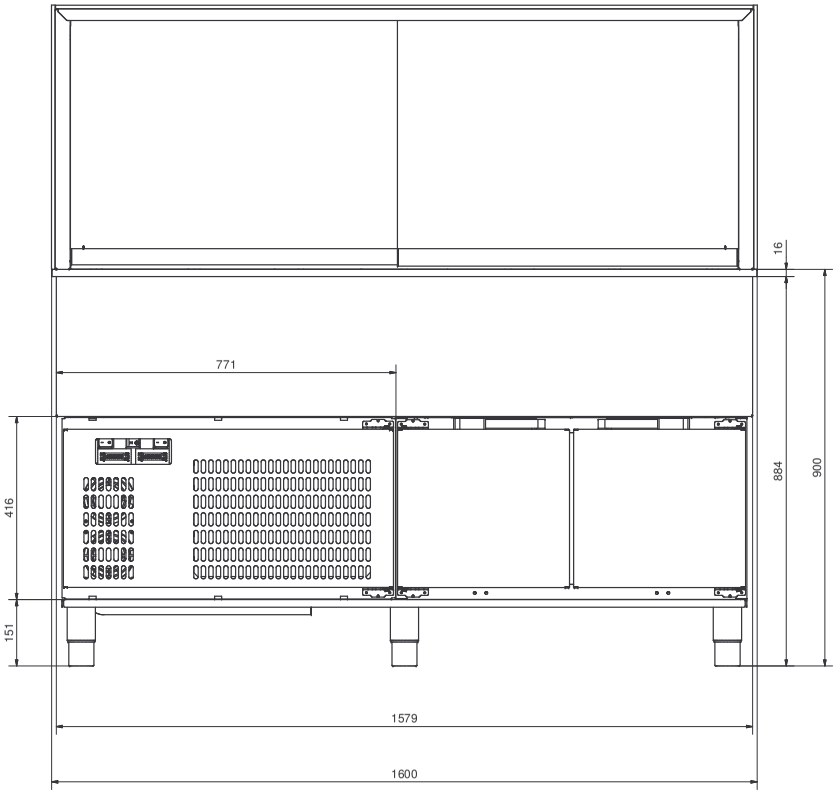

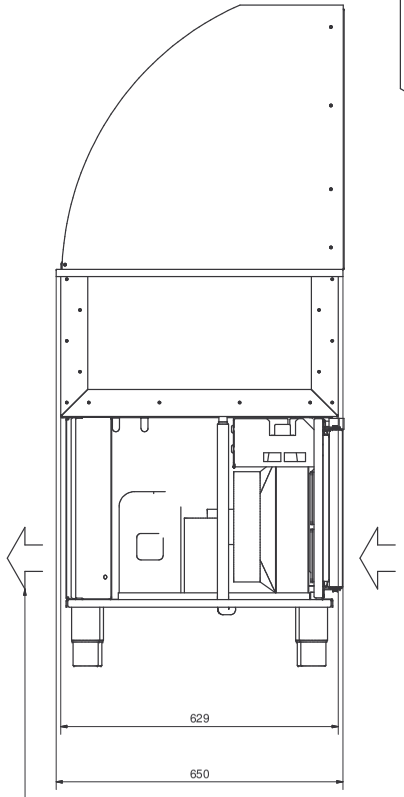

Lauhdutusilmankierto
Luft cirkulation
Air circulation

Osa	Nimitys1	Nimitys2	Koodi	Kpl	Määrä	Materiaali	Piir. nro
metos	Tuote J_LGD16				-	Suhde	
	Malli					Suunn. 6.11.2006	HEVI

ASENNUSOHJE
INSTALLATION RITNING
INSTALLATION DRAWING

Koodi J06328

J06379 A 1

Tulostettu 12.4.2005 00:00

A Tolerioimattomat mitat LT06031

Asennuskuva J06379 A1

Aukotus lauhdutusilmankiertoa varten.
Aukkojen pinta-alan oltava min.7dm²

Hål för luftcirkulation,min yta 7dm²

Holes for air circulation,min area 7dm²

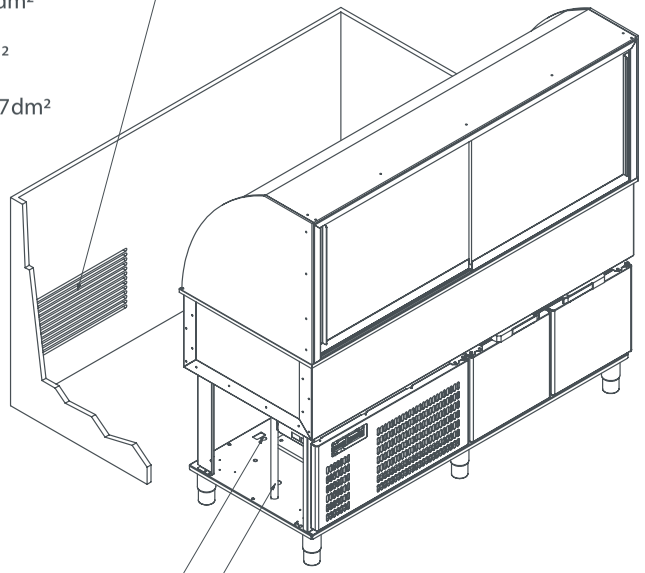

Viemäröinti - muoviletku ⌀19/25 L~2m
Avlopp - plastslang ⌀19/25 L~2m
Drain - plastic tube ⌀19/25 L~2m

Liitäntäjohto L=3m
Anslutningsledning L=3m
Connection cable L=3m
1/N/PE AC230V 50-60Hz

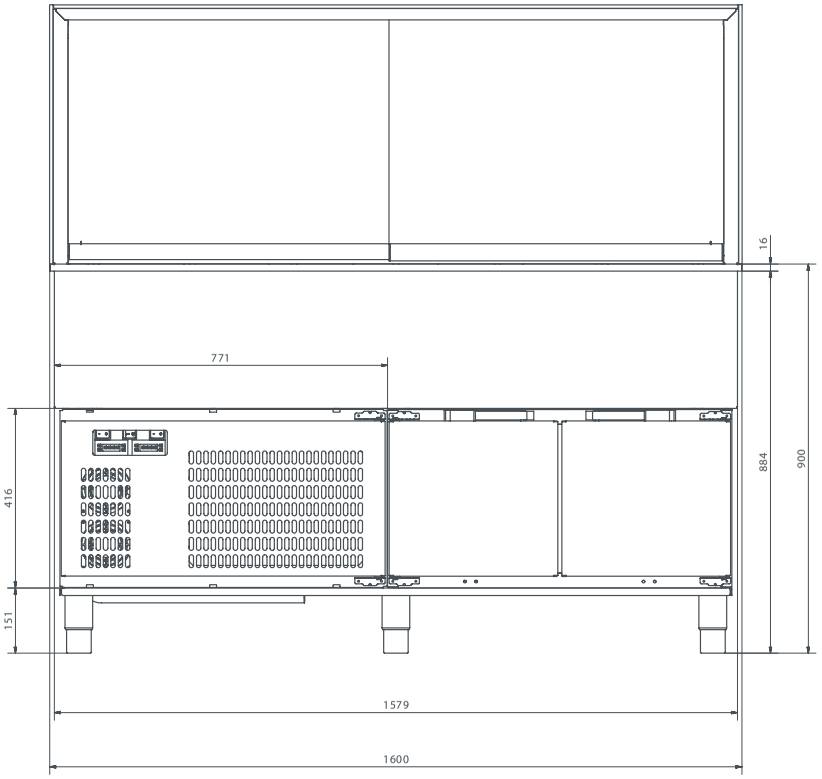

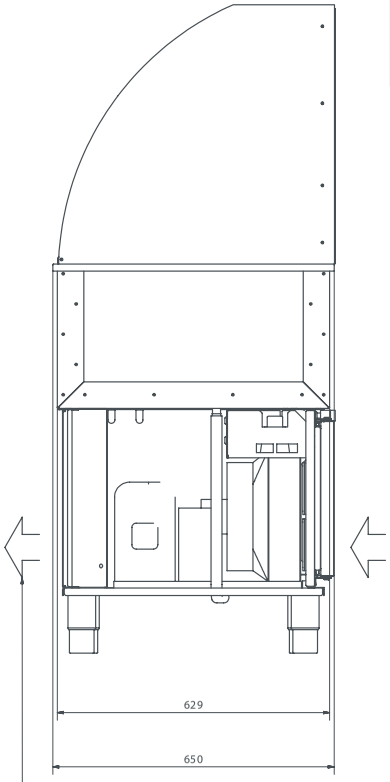

Lauhdutusilmankierto
Luft cirkulation
Air circulation

Osa	Nimitys1	Nimitys2	Koodi	Kpl	Määrä	Materiaali	P:ir. nro
		Tuote J_LGD16			-	Suhde	
		Malli				Suunn. 6.11.2006	HEVI

ASENNUSOHJE
INSTALLATION RITNING
INSTALLATION DRAWING

Koodi J06328

J06379 A 1

Tulostettu 12.4.2005 00:00

A Tokroimatomat mitat LT06031

Item	Model	Type	Specification
Electric connection			230 V 50 Hz
Power input	L	800, 1200	1,1 kW
Power input	L	1600	1,4 kW
Power input	O	800, 1200,1600	1,4 kW
Temperature adjustment range			+4°C...+12°C
Ambient conditions			max. +25°, rel. humidity 60%
Refrigerant			R404A
Amount of refrigerant		800	950 g
Amount of refrigerant		1200, 1600	1050 g
Required refrigerating capacity		800	880 W
Required refrigerating capacity		1200	1210 W
Required refrigerating capacity		1600	1390 W
Evaporator temperature			-5°C
Insulation material			Polyurethane
Control unit			Automatic
Defrost			Automatic

L=HALO WITH LID, O=HALO OPEN
800=Width 800 mm, 1200=Width 1200 mm, 1600=Width 1600 mm

METOS OY AB
LOMAKE LT30024
Rev. PED 5.1 15.12.2009

VAATIMUSTENMUKAISUUSVAKUUTUS
FÖRSÄKRAN OM ÖVERENSSTÄMMELSE
DECLARATION OF CONFORMITY

Valmistajan nimi / Tillverkarens namn / Manufacturer's name
METOS OY AB

Osoite / Adress / Adress
04220 KERAVA
FINLAND

Vakuuttaa, että seuraava tuote / Försäkrar att följande produkt / Declare that the following product

Nimi, tyyppi tai malli / Namn, typ eller modell / Name, type or model

Halo - lasikot/montrar/displays
Halo LED-lasikot/montrar/displays
CD - lasikot/montrar/displays

on seuraavien direktiivien asiaankuuluvien säännösten mukainen / överensstämmer med tillämpliga bestämmelser i följande direktiv / is in conformity with the relevant provisions of the following directives

LVD 2006/95/EC
MD 2006/95/EC
RoHS 2011/65/EC
WEEE 2002/96/EC
EMC 2004/108/EC

ja lisäksi vakuuttaa, että seuraavia yhdenmukaistettuja standardeja (tai niiden osia/kohtia) on sovellettu / och försäkrar dessutom att följande harmoniserade standarder (eller delar/paragrafer) har använts / and furthermore declares that the following harmonised standards (or parts/clauses) have been used

EN 55011:2009+A1
EN 55014-2:1997+A1+A2

ja lisäksi vakuuttaa, että seuraavia muita standardeja (tai niiden osia/kohtia) on sovellettu / och försäkrar dessutom att följande andra standarder (eller delar/paragrafer) har använts / and furthermore we declare that the following other standards (or parts/clauses) have been used

SFS-EN 60204-1:2006
SFS-EN 60335-1:2005
SFS-EN 60335-2:2003

Tuotteen suunnitelmatarkastustodistus ja laatujärjestelmää valvova ilmoitettu laitos (vain painelaitteet)
Produktens konstruktionskontrollcertifikat och anmält organ, som övervakar kvalitetssystemet (endast tryckkärl)
Product design examination certificate and the notified body supervising the quality system (only pressure vessels)

Alla mainittu henkilö on valtuutettu kokoamaan teknisen tiedoston / Nedan nämda person är bemyndigad att sammanställa den tekniska dokumentfilen / The person mentioned below is authorized to compile the technical file

Jani Paatola Metos Oy Ab, Ahjonkaarre, 04220 Kerava, Finland

Antopaikka ja päivä / Utfärdad på ort och datum / Place and date of issue
KERAVA 8.11.2012

Valtuutetun henkilön nimi ja asema / Bemyndigad persons namn och befattning / Name and title of authorized person

Pekka Mönkkönen – Director of Business Unit

Jani Paatola – Plant Manager

metos
kitchen intelligence